

AK 10 gelb/yellow

Hirschmann Automation and Control GmbH:Industrial Connectors:Measuring and Testing Equipment:Alligator clips:4 mm system

Product description	
Description	Insulated alligator clip. Clamping range up to 6 mm bolt diameter. Fine wire section for very thin wires. Only the lower part o fthe clip has a tin-plated, brass contact insert. 4 mm diameter socket connection.
Type	AK 10 gelb/yellow
Order No.	930 126-103
System	4 mm system
Clamping range	6 mm
Housing Color	yellow
Other standard types	black color, order no. 930 126-100; red color, order no. 930 126-601; blue color, order no. 930 126-102; green color, order no. 930 126-104

Drawing

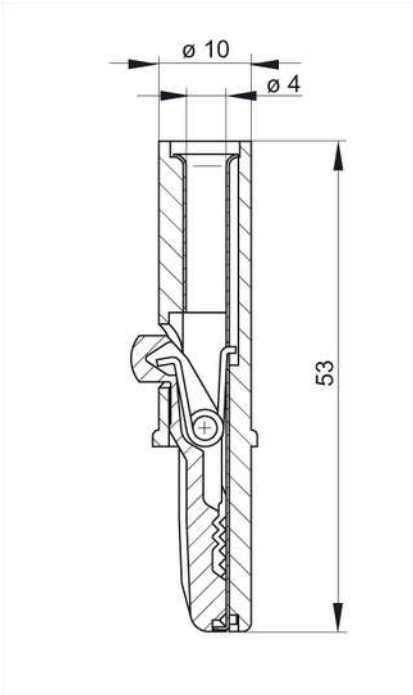

Technical data

Type of contact	socket
Type of termination	4 mm socket
Rated voltage	DC 60 V
Rated current	6 A
Contact resistance	15 mOhm
Material	
Contact material	brass
Contact surface material	tinned
Housing material	PS
Environmental conditions	
Temperature range	-25 °C to +60 °C
Inflammability class	
Housing	94 HB