

SILKB 12 F

Rod ends with a female thread

Rod end data

Tolerances,

Radial internal clearance

Technical specification

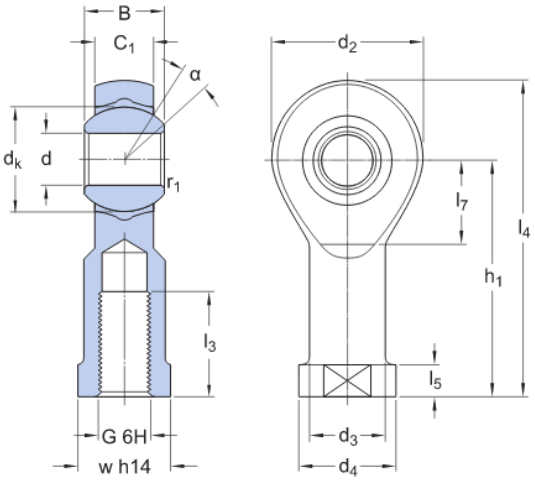

DIMENSIONS

d	12 mm	Bore diameter
d2	max.33 mm	Diameter head
B	16 mm	Width inner ring
G	M 12	Thread
C1	max.12.5 mm	Width head
h1	50 mm	Height shank end face - centre rod end eye
α	13 °	Angle of tilt
d_k	22.225 mm	Raceway diameter inner ring
d3	≈17.5 mm	Housing diameter shank
d4	max.23 mm	Housing diameter shank
l3	min.18 mm	Length threat
l4	max.68 mm	Length (height) housing
l5	≈6.5 mm	Length wrench flat
l7	min.16 mm	Distance shank chamfer - centre rod end eye
w	19 mm	Size wrench

r1	min.0.3 mm		Chamfer dimension bore

CALCULATION DATA

Basic dynamic load rating	C	13.2 kN
Basic static load rating	C_0	17 kN
Specific dynamic load factor	K	50 N/mm
Material constant	K_M	530

MASS

Mass rod end	0.12 kg

More information

Product details

- Designs and variants
- Rod end data
- Fatigue strength

Engineering information

- Principles of selection and application

Tools

- SKF Bearing Calculator

Terms and conditions

By accessing and using this website / app owned and published by AB SKF (publ.) (556007-3495 · Gothenburg) ("SKF"), you agree to the following terms and conditions:

Warranty Disclaimer and Limitation of Liability

Although every care has been taken to assure the accuracy of the information on this website / app, SKF provides this information "AS IS" and DISCLAIMS ALL WARRANTIES, EXPRESS OR IMPLIED, INCLUDING, BUT NOT LIMITED TO, IMPLIED WARRANTIES OF MERCHANTABILITY AND FITNESS FOR A PARTICULAR PURPOSE. You acknowledge that your use of this website / app is at your sole risk, that you assume full responsibility for all costs associated with use of this website / app, and that SKF shall not be liable for any direct, incidental, consequential, or indirect damages of any kind arising out of your access to, or use of the information or software made available on this website / app. Any warranties and representations in this website / app for SKF products or services that you purchase or use will be subject to the agreed upon terms and conditions in the contract for such product or service. Further, for non-SKF websites / apps that are referenced in our website / app or where a hyperlink appears, SKF makes no warranties concerning the accuracy or reliability of the information in these websites / apps and assumes no responsibility for material created or published by third parties contained therein. In addition, SKF does not warrant that this website / app or these other linked websites / apps are free from viruses or other harmful elements.

Copyright

Copyright in this website / app copyright of the information and software made available on this website / app rest with SKF or its licensors. All rights are reserved. All licensed material will reference the licensor that has granted SKF the right to use the material. The information and software made available on this website / app may not be reproduced, duplicated, copied, transferred, distributed, stored, modified, downloaded or otherwise exploited for any commercial use without the prior written approval of SKF. However, it may be reproduced, stored and downloaded for use by individuals without prior written approval of SKF. Under no circumstances may this information or software be supplied to third parties.
This website /app includes certain images used under license from Shutterstock, Inc.

Trademarks and Patents

All trademarks, brand names, and corporate logos displayed on the website / app are the property of SKF or its licensors, and may not be used in any way without prior written approval by SKF. All licensed trademarks published on this website / app reference the licensor that has granted SKF the right to use the trademark. Access to this website / app does not grant to the user any license under any patents owned by or licensed to SKF.

Changes

SKF reserves the right to make changes or additions to this website / app at any time.