Diaphragm Pressure Gauges, Process Industry

Modelcode type: **4XX.XX**

Item number: **8503419**

Diaphragm Pressure Gauges, Process Industry	
Design	EN 837-3
Nominal size	100 mm
Accuracy class	class 1.6
Scale range	0...16 bar
Unit of outer Scale	bar
Overpressure safety	5 x Full scale value, max 40 bar + vacuum safe
Process connection	1/2 NPT
Case	with pressure blowout disk
Materials	
Lower Body Material	Stainless-Steel
Diaphragm Material	Inconel 718 (2.4668)
Sealing of pressure chamber	FPM
Movement	stainless steel
Dial	Aluminum, white
Case material	Stainless steel 1.4301
Window	laminated safety glass
Bezel ring	cam ring (bayonet type), stainless steel
Operating conditions	
Permissible ambient temperature	-20 … +60 °C
Ingress protection	IP 54
Options	
Labelcode	
Label	WIKA standard without / with Tag-number
language of the label	German

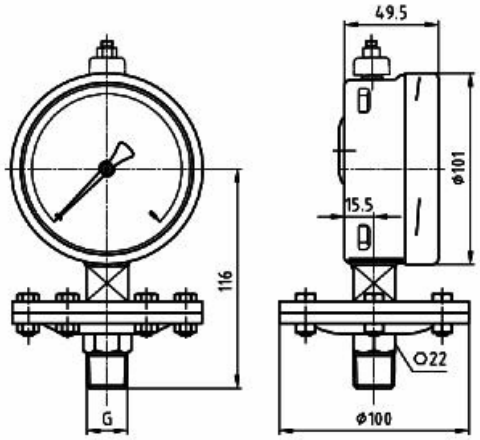

© Copyright by WIKA: Reproduction of this document is prohibited