P 17 Tempra IP 44 - LV 16 and 32 A
sockets, plugs, mobile sockets, appliance inlets


555 53


573 54


574 34


575 14


575 84

Technical characteristics (p. 389)

Surface mounting sockets

Closing without screws

Pack	Cat.Nos 16 A	Cat.Nos 32 A	
			100/130 V~
10	555 50		2P+E
			200/250 V~
10	555 53	555 73	2P+E
			380/415 V~
10	555 57	555 77	3P+E
10	555 58	555 78	3P+N+E

Panel mounting sockets inclined outlet

Can be fixed on plain faceplates or pre-drilled (p. 394) and on flush mounting boxes (p. 387)

Pack	Cat.Nos 16 A	Cat.Nos 32 A	
			100/130 V~
5	576 10		2P+E
			200/250 V~
10	576 11	576 12	2P+E
			380/415 V~
10	576 17	576 18	3P+E
10	576 23	576 24	3P+N+E

Panel mounting sockets straight outlet small flange

Can be fixed only on plain faceplates Cat.Nos 577 15/16 (p. 394)

Pack	Cat.Nos 16 A	
		200/250 V~
5	573 54	2P+E

Phase inverter plugs

Straight plugs for changing rotation direction of a 3-phase electric motor

Pack	Cat.Nos 16 A	Cat.Nos 32 A	
			380/415 V~
5	574 40	581 40	3P+E
5	574 41	581 41	3P+N+E

Straight plugs

Cable clamping and closing without screws

Pack	Cat.Nos 16 A	Cat.Nos 32 A	
			100/130 V~
10	574 31		2P+E
			200/250 V~
10	574 34	581 34	2P+E
			380/415 V~
10	574 38	581 38	3P+E
10	574 39	581 39	3P+N+E

Mobile sockets

Cable clamping and closing without screws

Pack	Cat.Nos 16 A	Cat.Nos 32 A	
			100/130 V~
10	575 11		2P+E
			200/250 V~
10	575 14	582 14	2P+E
			380/415 V~
10	575 18	582 18	3P+E
10	575 19	582 19	3P+N+E

Appliance inlets

Pack	Cat.Nos 16 A	Cat.Nos 32 A	
			200/250 V~
5	575 84	582 84	2P+E
			380/415 V~
5	575 88	582 88	3P+E
5	575 89	582 89	3P+N+E

For 480/500 V devices, please consult us

Red catalogue numbers: New products

P 17 Tempra - domestic pin configuration 16 A - 250 V~


576 69


576 72


539 48



521 05 + 741 30


577 22

Technical characteristics (p. 390)

Pack	Cat.Nos	Panel mounting sockets
		Domestic pin configuration sockets IP 54 cover closed - IP 44 connected IK 09 according to IEC 62262 and EN 62262 2P+E 250 V~ Material: plastic Self-extinguishing: 850 °C
20	576 69	White panel mounting sockets with small flange Cannot be fixed on pre-drilled faceplate
20	576 72	Blue panel mounting sockets Can be fixed on faceplate of the P17 combined units (p. 394)

		Panel mounting adaptor
8	539 48	Accepts Mosaic mechanisms 2 modules (except particular prominence)

		Adaptor
10	521 05	16 A - 250 V~ IEC input 2P+E Output: empty model to be equipped with Mosaic mechanism all standards

		Flush mounting boxes
		IP 55 For panel mounting sockets inclined outlet installation (IP 44 or IP 66/67) Flush mounting boxes with faceplates
3	577 21	For 2 panel mounting sockets With single fixing centres 70 x 70 mm - 16 A
3	577 22	For 1 panel mounting socket With single fixing centres 70 x 70 mm - 16 or 32 A (32 A to be fixed horizontally)

P 17 Tempra IP 44 - ELV 16 and 32 A


552 06


552 21


552 45

Technical characteristics (p. 391)

Pack	Cat.Nos	Surface mounting sockets
5	16 A 552 06 | 32 A 552 56	20/25 V~ 2P

		Panel mounting sockets
5	16 A 552 45 | 32 A 552 95	20/25 V~ 2P

		Straight plugs
5	16 A 552 21 | 32 A 552 71	20/25 V~ 2P

		Mobile sockets
5	16 A 552 31 | 32 A 552 81	20/25 V~ 2P

		Appliance inlets
5	16 A 552 41 | 32 A 552 91	20/25 V~ 2P

Legrand System

These products are part of industrial equipment > See p. 266-267

Red catalogue numbers: New products

P 17 Tempra IP 66/67 - LV 16 and 32 A


553 07


568 07


6571 06

Technical characteristics (p. 391)

Pack	Cat.Nos 16 A	Cat.Nos 32 A	
			Surface mounting sockets
			200/250 V~
5	553 03	553 23	2P+E
			380/415 V~
5	553 07	553 27	3P+E
5	553 08	553 28	3P+N+E
			Panel mounting sockets
			Can be fixed on the faceplates (p. 394)
			200/250 V~
5	576 51	576 52	2P+E
			380/415 V~
5	576 57	576 58	3P+E
5	576 63	576 64	3P+N+E
			Straight plugs
			200/250 V~
5	563 03	563 23	2P+E
			380/415 V~
5	563 07	563 27	3P+E
5	563 08	563 28	3P+N+E
			Mobile sockets
			200/250 V~
5	562 03	562 23	2P+E
			380/415 V~
5	562 07	562 27	3P+E
5	562 08	562 28	3P+N+E
			Appliance inlets
			200/250 V~
5	568 03	568 23	2P+E
			380/415 V~
5	568 07	568 27	3P+E
5	568 08	568 28	3P+N+E

Combined unit, plug and mobile socket for refrigerated containers

32 A - 440 V~ - 50/60 Hz - 3P+E - 3 hours IK 09
Plastic body and cover - Stainless steel screws

1	6571 06	Combined unit with interlocked switched socket - Double mechanical interlock - Cable glands are not supplied
1	6571 26	Straight plug With cable grip Ø12 to 21.5 mm
1	6571 46	Mobile socket With cable grip Ø12 to 21.5 mm

P 17 Tempra IP 66/67 - LV 63 and 125 A

easy connection disconnection


587 05


587 14

Technical characteristics (p. 392)

Pack	Cat.Nos 63 A	Cat.Nos 125 A	
			Surface mounting sockets
			200/250 V~
2	587 40		2P+E
			380/415 V~
2 | 1	587 44	591 06	3P+E
2 | 1	587 45	591 07	3P+N+E
			Panel mounting sockets
			Can be fixed on the faceplates Cat.Nos 577 17/19 (p. 394)
			200/250 V~
2	587 20		2P+E
			380/415 V~
2 | 1	587 24	591 16	3P+E
2 | 1	587 25	591 17	3P+N+E
			Straight plugs
			200/250 V~
2	587 00		2P+E
			380/415 V~
2 | 1	587 04	591 26	3P+E
2 | 1	587 05	591 27	3P+N+E
			Mobile sockets
			200/250 V~
2	587 10		2P+E
			380/415 V~
2 | 1	587 14	591 36	3P+E
2 | 1	587 15	591 37	3P+N+E
			Appliance inlets
			200/250 V~
2	587 30		2P+E
			380/415 V~
2 | 1	587 34	591 46	3P+E
2 | 1	587 35	591 47	3P+N+E

Plexo 66 (p. 749)

Other voltages (on request)

Legrand System

These products are part of industrial equipment > See p. 266-267

P 17 Tempra IP 44 - LV 16 and 32 A

■ Characteristics

Terminal connection:
• Panel and surface mounting sockets
16 A: max. 1 x 4 mm² rigid
32 A: max. 1 x 10 mm² rigid
• Appliance inlets:
16 A: max. 1 x 2.5 mm² rigid
32 A: max. 1 x 6 mm² rigid
• Plugs and mobile sockets:
16 A: max. 1 x 2.5 mm² flexible
32 A: max. 1 x 6 mm² flexible
IP 44 according to IEC and EN 60529
IK 09 according to IEC 62262 and EN 62262
Material: plastic
Self-extinguishing: 850 °C (support of active parts) / 650 °C (plastic housing)
- 25 °C to + 40 °C according to IEC 60309-1

■ Dimensions

Surface mounting sockets (p. 386)

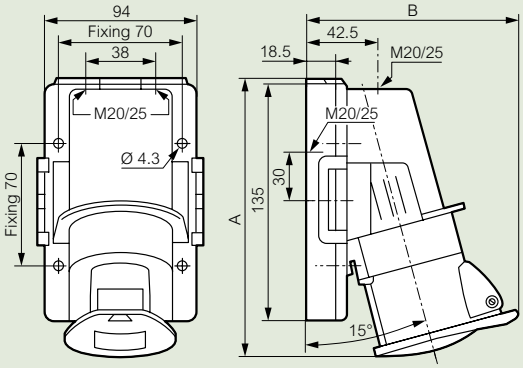

	LV 16 A			LV 32 A		
	2P+E	3P+E	3P+N+E	2P+E	3P+E	3P+N+E
A	158	158	171	181	181	192
B	121	123	130	135	135	140

Panel mounting sockets inclined outlet (p. 386)

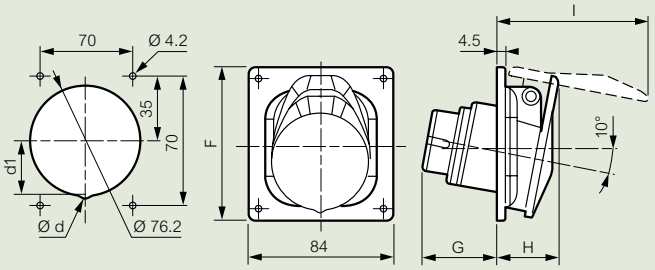

	Weight (kg)	Ø d	d1	F	G	H	I
LV 16 A							
2P+E	0.110	–	–	84	42	33	83.5
3P+E	0.140	–	–	84	43	34.5	91.3
3P+N+E	0.165	–	–	84	43	36.5	100
LV 32 A							
2P+E	0.220	–	–	94	54	44	112
3P+E							
3P+N+E	0.255	8	36	94	54	45	120

Panel mounting socket straight outlet small flange (p. 386)

Cat.No 573 54

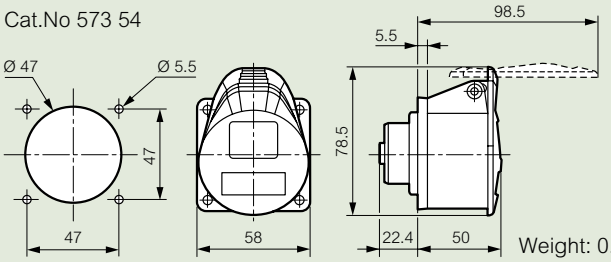

Weight: 0.105 kg

Straight plugs (p. 386)

Cat.Nos 574 31/34/38/39 and 581 34/38/39

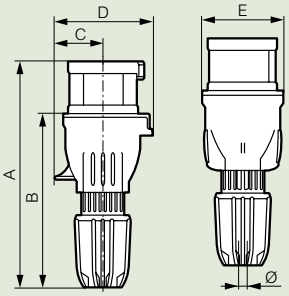

	A	B	C	D	E	Ø
LV 16 A						
2P+E	143 to 159	106 to 122	30	65	56	8 to 14
3P+E	143 to 159	106 to 122	34	69	56	8 to 14
3P+N+E	152 to 168	115 to 131	38	78	65	10 to 18
LV 32 A						
2P+E	161 to 177	115 to 131	39	79	65	10 to 18
3P+E	161 to 177	115 to 131	39	79	65	12 to 20
3P+N+E	167 to 181	121 to 135	45	88	72	14 to 21

Mobile sockets (p. 386)

Cat.Nos 575 11/14/18/19 and 582 14/18/19

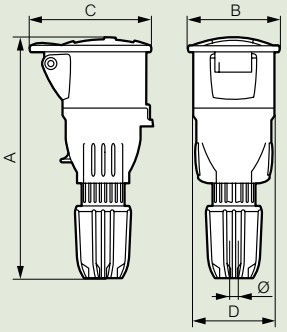

	A	B	C	D	Ø
LV 16 A					
2P+E	153 to 169	55	78	56	8 to 14
3P+E	153 to 169	62	85	56	8 to 14
3P+N+E	164 to 180	70	94	65	10 to 18
LV 32 A					
2P+E	174 to 190	71	98	65	10 to 18
3P+E	174 to 190	71	98	65	12 to 20
3P+N+E	177 to 191	77	101	72	14 to 21

P 17 Tempra IP 44 - LV 16 and 32 A (continued)

P 17 Tempra domestic pin configuration

Appliance inlets (p. 386)

Cat.Nos 575 84/88/89 and 582 84/88/89

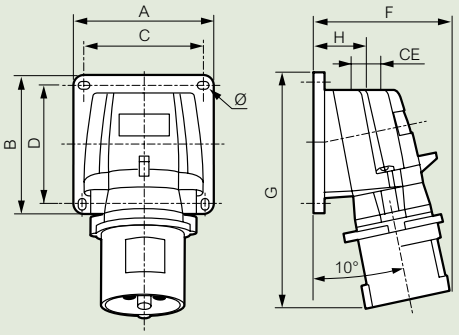

	Weight (kg)	A	B	C	D	F	G	H	CE	Ø
LV 16 A										
2P+E	0.168	84	84	72	72	77	126	34	M20	4.3
3P+E	0.232	84	84	72	72	84	134	34	M20	4.3
3P+N+E	0.256	84	84	72	72	91	141	34	M20	4.3
LV 32 A										
2P+E	0.325	110	110	98	98	96	168	39	M25	5.3
3P+E										
3P+N+E	0.364	110	110	98	98	102	168	39	M25	5.3

■ Dimensions

Domestic pin configuration sockets (p. 387)

Cat.No 576 69

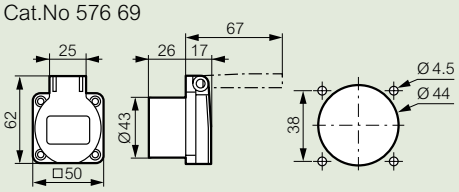

Weight: 0.046 Kg

Cat.No 576 72

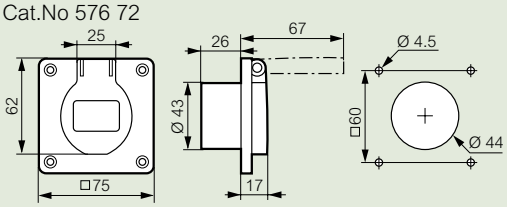

Weight: 0.052 Kg

Adaptor 16 A - 230 V (p. 387)

Cat.No 521 05

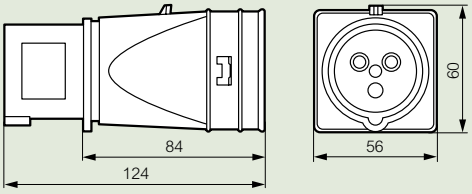

Flush mounting boxes (p. 387)

Cat.No 577 21

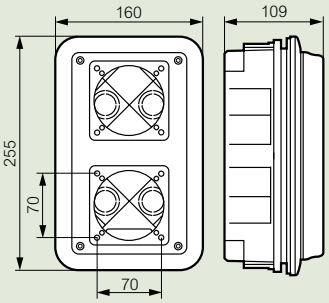

Cat.No 577 22

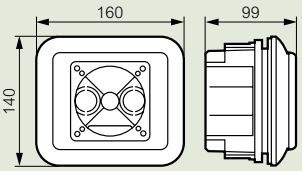

Panel mounting adaptor (p. 387)

Cat.No 539 48

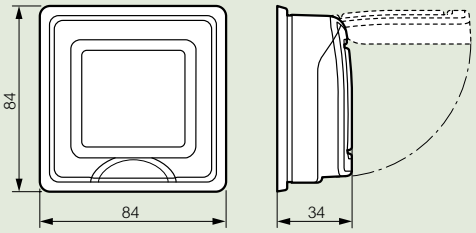

P 17 Tempra IP 44 - ELV 16 and 32 A

■ Characteristics

Terminal connection:
Max. 1 x 10 mm² (rigid for fixed products flexible for mobile products)
IP 44 according to IEC 60529 and EN 60529
IK 09 according to IEC 62262 and EN 62262
Material: plastic
Self-extinguishing: 850 °C (support of active parts) / 650 °C (plastic housing)
Temp. rating: - 25 °C to + 40 °C
Conform to IEC 60309-1 / IEC 60309-2 and EN 60309-1 / EN 60309-2

■ Dimensions

Surface mounting sockets (p. 387)

Cat.Nos 552 06/56

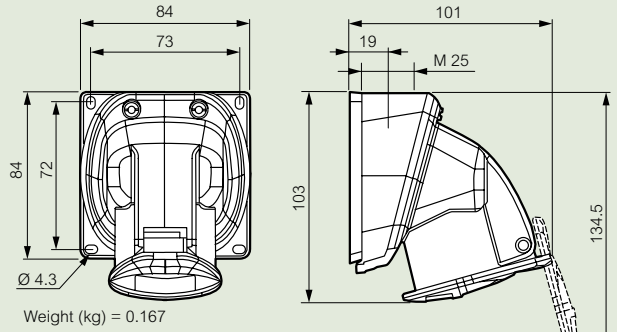

Weight (kg) = 0.167

Panel mounting sockets (p. 387)

Cat.Nos 552 45/95

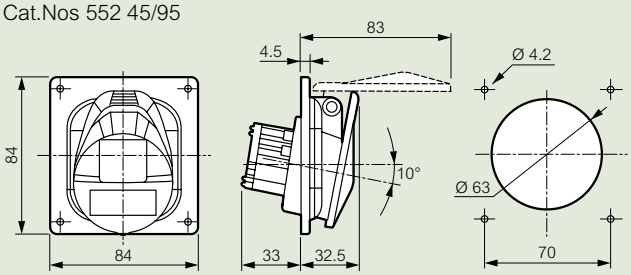

Straight plugs (p. 387)

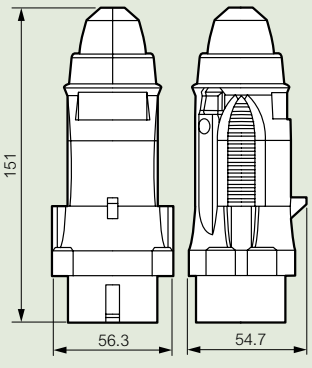

Weight (kg) = 0.132

Mobile sockets (p. 387)

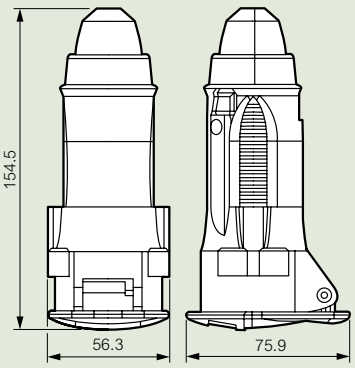

Weight (kg) = 0.16

Appliance inlets (p. 387)

Cat.Nos 552 41/91

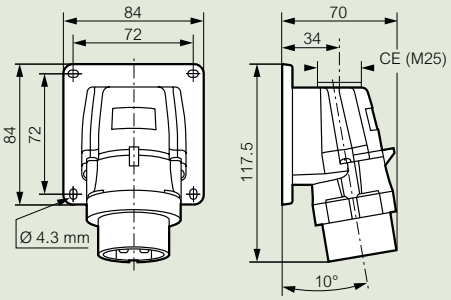

P 17 Tempra IP 66/67 - LV 16 and 32 A

■ Characteristics

Terminal connection:
• Panel and surface mounting sockets
16 A: max. 1 x 4 mm² rigid - 32 A: max. 1 x 10 mm² rigid
• Plugs, mobile sockets:
16 A: max. 1 x 2,5 mm² flexible - 32 A: max. 1 x 6 mm² flexible
• Appliance inlets:
16 A: max. 1 x 2.5 mm² rigid - 32 A: max. 1 x 6 mm² rigid
IP 66/67 according to IEC 60529 and EN 60529
IK 09 according to IEC 62262 and EN 62262
Material: plastic
Self-extinguishing: 850 °C (support of active parts) / 650 °C (plastic housing)
Temp. rating: - 25 °C to + 40 °C
Conform to IEC 60309-1 and IEC 60309-2

■ Dimensions

Surface mounting sockets (p. 388)

Cat.Nos 553 03/07/08/23/27/28

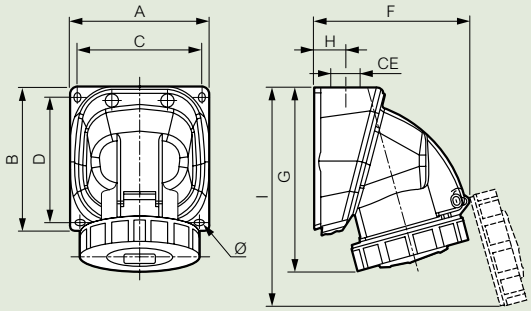

	Weight (kg)	A	B	C	D	F	G	H	I	CE	Ø
LV 16 A											
2P+E	0.230	84	84	73	72	94	112	20	130	M 20	4.3
3P+E	0.289	100	100	88	87	108	128	24	154	M 20	4.3
3P+N+E	0.317	100	100	88	87	110	129	24	157	M 20	4.3
LV 32 A											
2P+E	0.425	110	110	98	97	126	146	30	175	M 25	5.3
3P+E											
3P+N+E	0.467	110	110	98	97	136	170.5	30	205	M 25	5.3

Panel mounting sockets (p. 388)

Cat.Nos 576 51/52/57/58/63/64

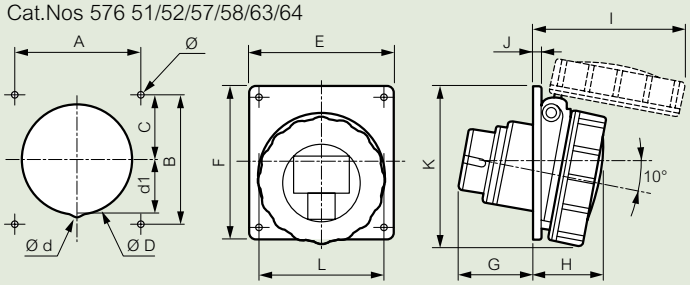

	Weight (kg)	Dimensions (mm)														
		A	B	C	ØD	Ød	d1	E	F	G	H	I	J	K	L	Ø
LV 16 A																
2P+E	0.140	70	70	35	76.2	-	-	84	84	42	39	83	4.5	90	72.5	4.2
3P+E	0.165	70	70	35	76.2	-	-	84	84	43	41	98	4.5	93	81	4.2
3P+N+E	0.195	70	70	35	76.2	-	-	84	84	43	41	99	4.5	91	86.5	4.2
LV 32 A																
2P+E/3P+E	0.240	70	70	35	76.2	-	-	84	94	54	50	113	4.5	101	94.5	4.2
3P+N+E	0.270	70	70	35	76.2	8	36	84	94	54	51	120	4.5	103	101	4.2

Straight plugs (p. 388)

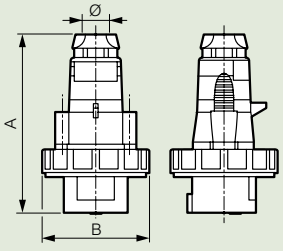

	Weight (kg)	A	B	Ø
LV 16 A				
2P+E	0.165	122	72.5	8 to 14
3P+E	0.175	126	81	8 to 14
3P+N+E	0.218	142	86.5	10 to 17.5
LV 32 A				
2P+E	0.255	152	94.5	10 to 17.5
3P+E	0.276	152	94.5	12 to 21.5
3P+N+E	0.325	158	101	12 to 21.5

P 17 Tempra IP 66/67 - LV 16 and 32 A (continued)

Mobile sockets (p. 388)

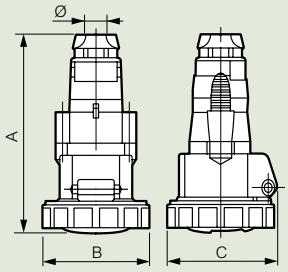

	Weight (kg)	A	B	C	Ø
LV 16 A					
2P+E	0.180	139	72.5	78.5	8 to 14
3P+E	0.215	144	81	89.5	8 to 14
3P+N+E	0.275	160	86.5	92	10 to 17.5
LV 32 A					
2P+E	0.320	171	94.5	103	10 to 17.5
3P+E	0.320	171	94.5	103	12 to 21.5
3P+N+E	0.387	177	101	109	12 to 21.5

Appliance inlets (p. 388)

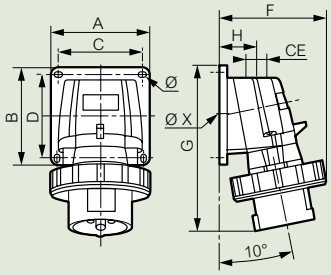

	Weight (kg)	A/B	C/D	F	G	H	CE	Ø
LV 16 A								
2P+E	0.188	84	72	87	126	34	M 20	4.3
3P+E	0.257	84	72	95	134	34	M 20	4.3
3P+N+E	0.297	84	72	100	141	34	M 20	4.3
LV 32 A								
2P+E	0.370	110	98	107	168	39	M 25	5.3
3P+E								
3P+N+E	0.413	110	98	113	168	39	M 25	5.3

P 17 Tempra IP 66/67 - LV 63 and 125 A

■ Characteristics

Terminal connection:
• Panel and surface mounting sockets
63 A: max. 1 x 25 mm² rigid - 125 A: max. 1 x 70 mm² rigid
• Appliance inlets:
63 A: max. 1 x 16 mm² rigid - 125 A: max. 1 x 50 mm² rigid
• Plugs and mobile sockets:
63 A: max. 1 x 16 mm² flexible - 125 A: max. 1 x 50 mm² flexible
IP 66/67 according to IEC 60529 and EN 60529
IK 09 according to IEC 62262 and EN 62262
Material: plastic
Self-extinguishing: 850 °C (support of active parts) / 650 °C (plastic housing)
Temp. rating: - 25 °C to + 40 °C. Conform to IEC 60309-1 and IEC 60309-2

■ Dimensions for 63 A

Surface mounting sockets (p. 388)
Cat.Nos 587 40/44/45

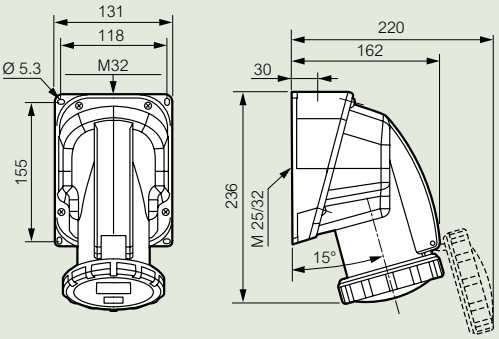

	Weight (kg)
3P+E	0.90
3P+N+E	0.95

Panel mounting sockets (inclined outlet) (p. 388)
Cat.Nos 587 20/24/25

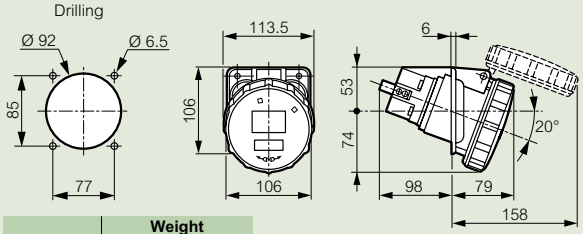

	Weight (kg)
3P+E	0.71
3P+N+E	0.77

Straight plugs (p. 388)

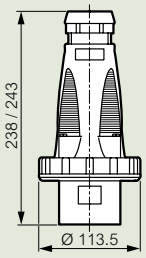

Mobile sockets (p. 388)

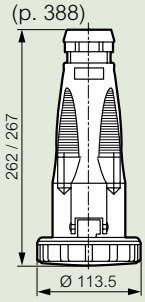

	Ø	Weight (kg)	
		Straight plugs	Mobile sockets
3P+E	19.3 to 28.5	0.57	0.78
3P+N+E	21.3 to 31.3	0.64	0.85

Appliance inlets (p. 388)
Cat.Nos 587 30/34/35

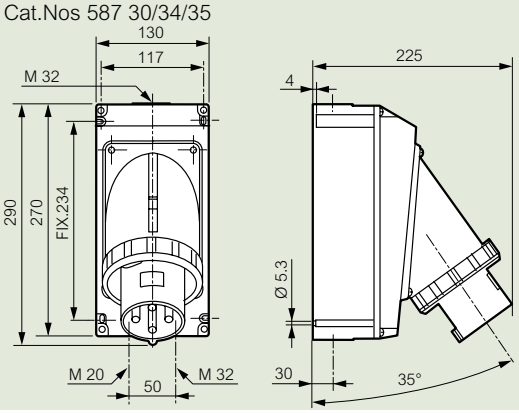

	Weight (kg)
3P+E	1.54
3P+N+E	1.61

P 17 Tempra IP 66/67 - LV 63 and 125 A (continued)

■ Dimensions for 125 A

Surface mounting sockets (p. 388)

Cat.Nos 591 06/07

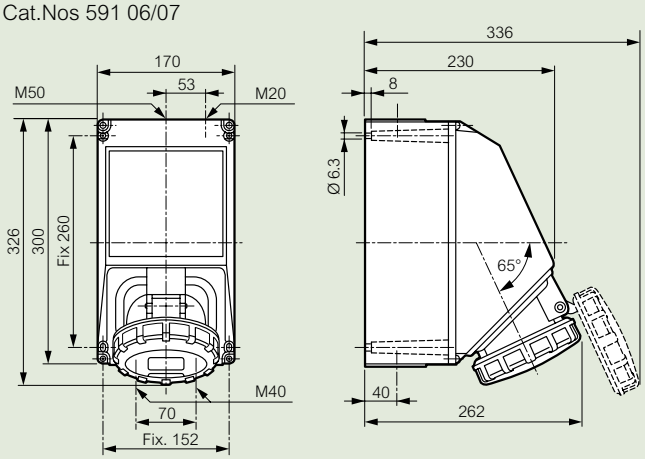

	Weight (kg)
3P+E	2.6
3P+N+E	2.73

Panel mounting sockets (p. 388)

Cat.Nos 591 16/17

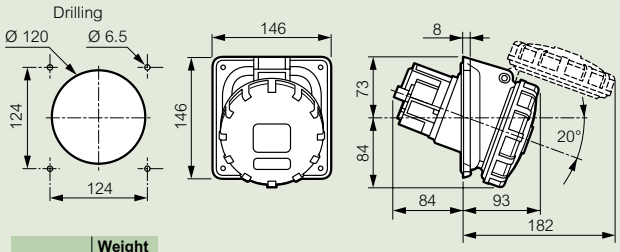

	Weight (kg)
3P+E	1
3P+N+E	1.2

Straight plugs (p. 388)

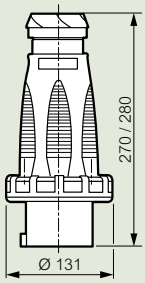

	Weight (kg)	Ø
3P+E	1.1	26 to 43
3P+N+E	1.22	28.5 to 50

Mobile sockets (p. 388)

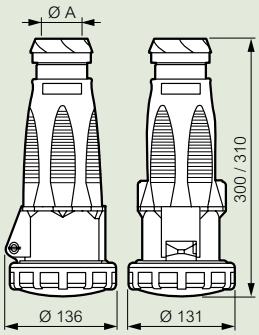

	Weight (kg)	A
3P+E	1.4	26 to 43
3P+N+E	1.53	28.5 to 50

Appliance inlets (p. 388)

Cat.Nos 591 46/47

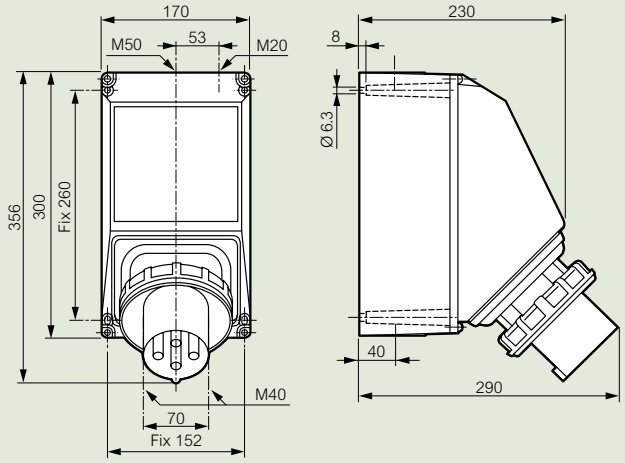

P17 Tempra combined units
to be composed

- IK 08 according to IEC 62262
- Self-extinguishing: 650 °C
- Max. IP 66

Technical characteristics (p. 396)

Example of combined unit configuration

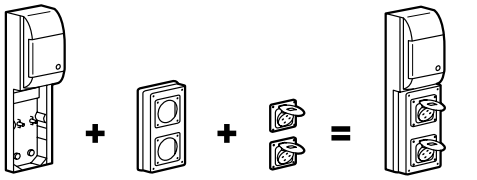

COMBINED UNITS HEIGHT 220 MM TO 441 MM

BASES FOR 220 x 125 MM FACEPLATES - MAX IP 66

Surface mounting box	Base up to 2 sockets 16 A	Base up to 4 sockets 16 A	Base up to 6 sockets 16 A
			
220 x 125 mm(4)	371 x 125 mm(4) Rail 5 Lexic modules	441 x 265 mm(4) Rail 12 Lexic modules	441 x 405 mm(4) Rail 18 Lexic modules
Pack / Cat.No	Pack / Cat.No	Pack / Cat.No	Pack / Cat.No
2 / 577 10	1 / 589 38	1 / 577 05	1 / 577 06

220 X 125 MM FACEPLATES

1 socket 16 or 32 A	2 sockets 16 A	1 socket 63 A	Plain plate
			
Pack / Cat.No	Pack / Cat.No	Pack / Cat.No	Pack / Cat.No
5 / 577 12	5 / 577 13(1)	2 / 577 17	5 / 577 15

COMBINED UNITS HEIGHT 280 MM TO 501 MM

BASES FOR 280 x 125 MM FACEPLATES - MAX IP 66

Surface mounting box	Base up to 3 sockets 16 A	Base up to 6 sockets 16 A	Base up to 9 sockets 16 A
			
280 x 125 mm(4)	421 x 125 mm(4) Rail 5 Lexic modules	501 x 265 mm(4) Rail 12 Lexic modules	501 x 405 mm(4) Rail 18 Lexic modules
Pack / Cat.No	Pack / Cat.No	Pack / Cat.No	Pack / Cat.No
3 / 577 11	1 / 577 20	1 / 577 03	1 / 577 04

280 x 125 MM FACEPLATE

2 sockets 16 or 32 A	1 socket 16 or 32 A and 1 socket 63 A	3 sockets 16 A(2)	Plain plate
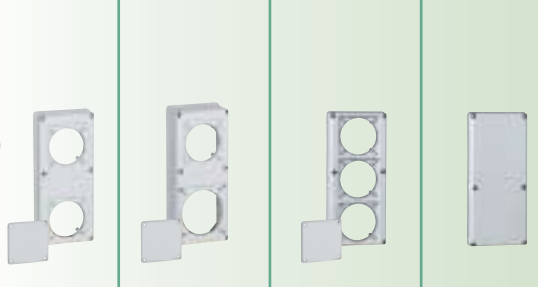			
Pack / Cat.No	Pack / Cat.No	Pack / Cat.No	Pack / Cat.No
4 / 577 18(1)	2 / 577 19(1)	4 / 577 14(1)	4 / 577 16

(1) Supplied with blanking plate (2) To be fixed horizontally except 16 A domestic pin sockets, vertically (IP 44 - connected)
(3) IP 54 cover closed - IP 44 connected (4) External dimensions: H x W

Legrand System

These products are part of industrial equipment > See p. 266-267

EXAMPLE OF SOCKETS

ELV (p. 387)			IP 44		
20/25 V~	16 A	2P	552 45		
	32 A	2P	552 95		
Domestic pin (p. 387)			IP 54(3)		
250 V	16 A	2P+E	576 72		
LV (p. 386 to 388)			IP 44	IP 66-67	
100/130 V~	16 A	2P+E	576 10	-	
200/250 V~	16 A	2P+E	576 11	576 51	
	32 A	2P+E	576 12	576 52	
	63 A	2P+E	-	587 20	
380/415 V~	16 A	3P+E	576 17	576 57	
		3P+N+E	576 23	576 63	
	32 A	3P+E	576 18	576 58	
		3P+N+E	576 24	576 64	
	63 A	3P+E	-	587 24	
		3P+N+E	-	587 25	

Possible combinations with bases for 220 x 125 mm faceplates

Cat.No	Nb of sockets	Intensity			Number of faceplates		
		16 A	16 A or 32 A	63 A	577 12	577 13	577 17
With box or base							
577 10 or 589 38	1 socket	-	1	-	1	-	-
		-	-	1	-	-	1
	2 sockets	2	-	-	-	1	-
577 05	2 sockets	-	2	-	2	-	-
		-	1	1	1	-	1
		-	-	2	-	-	2
	3 sockets	3	-	-	1	1	-
		2	1	-	1	1	-
		2	-	1	-	1	1
	4 sockets	4	-	-	-	2	-
577 06	3 sockets	-	3	-	3	-	-
		-	-	3	-	-	3
		-	1	2	1	-	2
		-	2	1	2	-	1
	4 sockets	2	1	1	1	1	1
		2	2	-	2	1	-
		2	-	2	-	1	2
	5 sockets	4	1	-	1	2	-
		4	-	1	-	2	1
	6 sockets	6	-	-	-	3	-

EXAMPLE OF SOCKETS

ELV (p. 387)			IP 44		
20/25 V~	16 A	2P	552 45		
	32 A	2P	552 95		
Domestic pin (p. 387)			IP 54(3)		
250 V	16 A	2P+E	576 72		
LV (p. 386 to 388)			IP 44	IP 66-67	
100/130 V~	16 A	2P+E	576 10	-	
200/250 V~	16 A	2P+E	576 11	576 51	
	32 A	2P+E	576 12	576 52	
	63 A	2P+E	-	587 20	
380/415 V~	16 A	3P+E	576 17	576 57	
		3P+N+E	576 23	576 63	
	32 A	3P+E	576 18	576 58	
		3P+N+E	576 24	576 64	
	63 A	3P+E	-	587 24	
		3P+N+E	-	587 25	

Possible combinations with bases for 280 x 125 mm faceplates

Cat.No	Nb of sockets	Intensity			Number of faceplates		
		16 A	16 A or 32 A	63 A	577 18	577 19	577 14
With box or base							
577 11 or 577 20	2 sockets	-	2	-	1	-	-
		-	1	1	-	1	-
	3 sockets	3	-	-	-	-	1
577 03	4 sockets	-	4	-	2	-	-
		-	2	2	-	2	-
		-	3	1	1	1	-
	5 sockets	3	1	1	-	1	1
		3	2	-	1	-	1
	6 sockets	6	-	-	-	-	2
577 04	6 sockets	-	6	-	3	-	-
		-	3	3	-	3	-
		-	5	1	2	1	-
		-	4	2	1	2	-
	7 sockets	3	2	2	-	2	1
		3	4	-	2	-	1
		3	3	1	1	1	1
	8 sockets	6	1	1	-	1	2
		6	2	-	1	-	2
	9 sockets	9	-	-	-	-	3

P 17 Tempra combined unitsw
to be composed

■ Dimensions

Cable glands are not supplied
Entries to drill

Bases (p. 394)
Cat.No 589 38

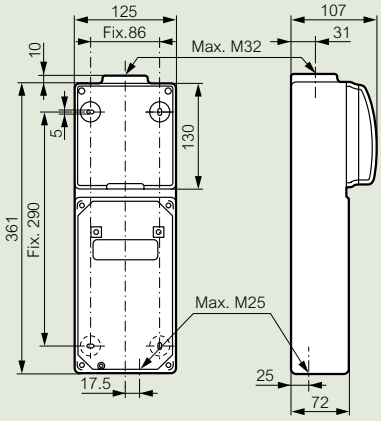

Cat.No 577 20

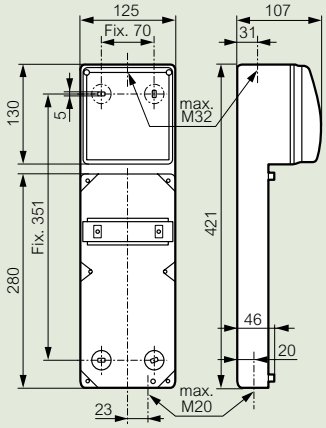

Cat.No 577 05

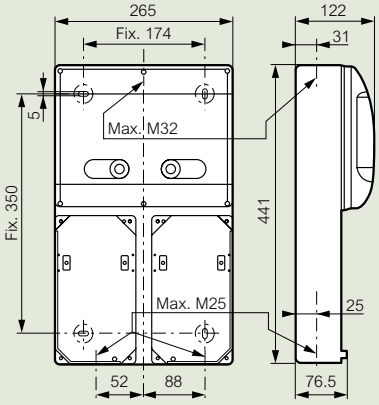

Cat.No 577 06

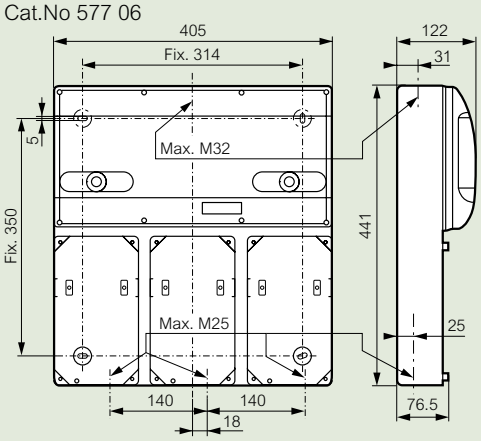

Cat.No 577 03

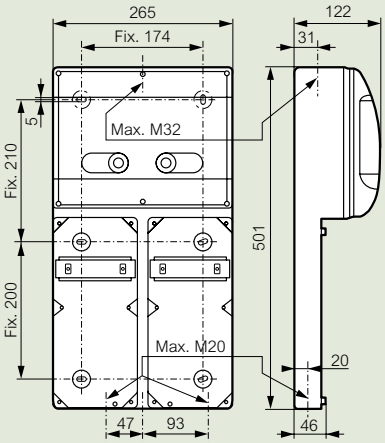

Cat.No 577 04

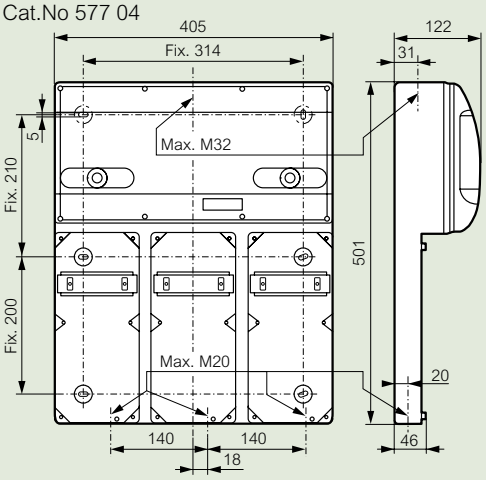

Surface mounting boxes (p. 394)

Cat.No 577 10

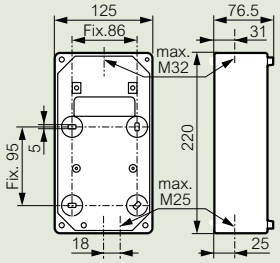

Cat.No 577 11

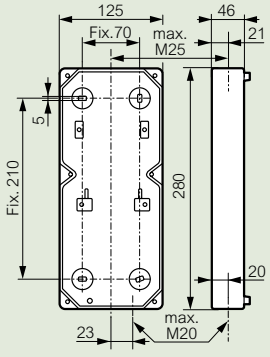

P 17 Tempra combined unit LV 16 to 63 A
interlocked switched sockets

16-32 A			without rail				with empty Din rail			
• IP 44, IP 55, IP 66 according to IEC 60529 and EN 60529 • IK 08 according to IEC 62262 • Conform to IEC 60439-1 • Supplied without cable glands • Self-extinguishing: 650 °C			125 x 220 mm				125 x 280 mm			
			IP 44		IP 55		IP 44		IP 66	
			Pack	Cat.Nos	Pack	Cat.Nos	Pack	Cat.Nos	Pack	Cat.Nos
200 to 250 V~ 50/60 Hz	16 A	2P+E	1	566 01	1	566 21	1	566 41	1	566 61
	32 A	2P+E	1	566 09	1	566 29	1	566 49	1	566 69
380 to 415 V~ 50/60 Hz	16 A	3P+E	1	566 05	1	566 25	1	566 45	1	566 65
		3P+N+E	1	566 06	1	566 26	1	566 46	1	566 66
	32 A	3P+E	1	566 13	1	566 33	1	566 53	1	566 73
		3P+N+E	1	566 14	1	566 34	1	566 54	1	566 74

63 A			without rail		with empty Din rail	
• IP 66 according to IEC 60529 and EN 60529 • IK 08 according to IEC 62262 • Conform to IEC 60439-1 • Supplied without cable glands • Self-extinguishing: 650 °C			IP 66		IP 66	
			Pack	Cat.Nos	Pack	Cat.Nos
380 to 415 V~ 50/60 Hz	63 A	3P+E	1	572 98	1	589 18
		3P+N+E	1	589 10	1	572 99

110 V~ (on request)

P 17 Tempra combined units LV 16 to 63 A
interlocked switched sockets

■ Dimensions

Without rail
LV 16/32 A

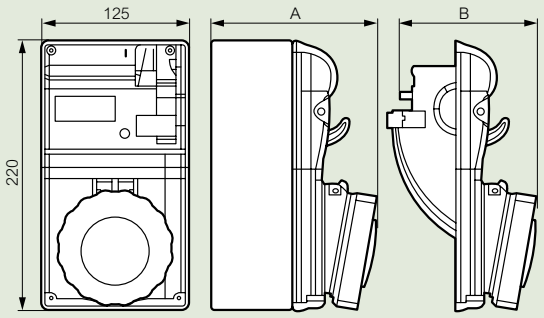

		IP 44 Cat.Nos	Dimensions (mm) A	Dimensions (mm) B	IP 55 Cat.Nos	Dimensions (mm) A	Dimensions (mm) B
LV 16 A	2P+E	566 01	127	122	566 21	133	128
	3P+E	566 05	129	124	566 25	134	129
	3P+N+E	566 06	130	125	566 26	135	130
LV 32 A	2P+E	566 09	138	133	566 29	143	138
	3P+E	566 13	138	133	566 33	143	138
	3P+N+E	566 14	139	134	566 34	144	139

With empty Din rail
LV 16/32 A

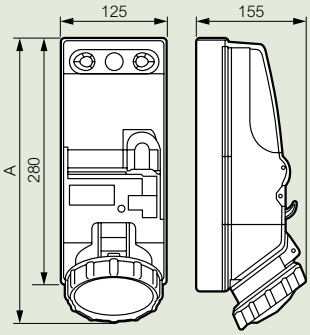

	A	
	IP 44	IP 66
LV 16 A	290	300
LV 32 A	295	310

LV 63 A
Cat.Nos 572 98 and 589 10

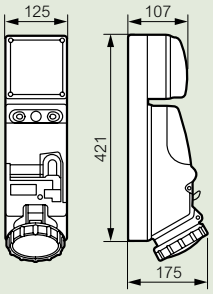

LV 63 A
Cat.Nos 589 18 and 572 99

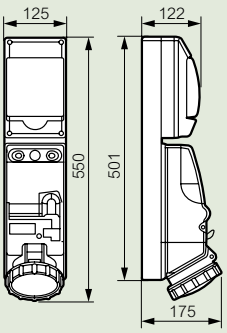

Legrand System

These products are part of industrial equipment > See p. 266-267

Hypra® IP 44 sockets and plugs metal, plastic, rubber, IP 44/55 Prisinter

LV 16 to 63 A and ELV 16 and 32 A

Conform to IEC 60309-1 and IEC 60309-2
IP 44 according to IEC 60529
IK 09: plastic and rubber
IK 10: metal according to IEC 62262
Self-extinguishing:
- 850°C (support of active parts) / 960 °C for Prinsinter)
- 650 °C: plastic housing conform to IEC 60695-2-10
- 50°C to + 100°C
(- 20°C for Prisinter)

Dimensions (p. 401 to 407)



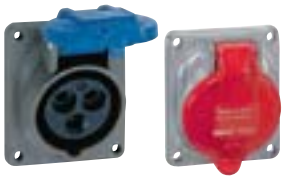



LV			FUNCTIONS									
			Prisinter[2]				Panel mounting sockets			Surface mounting sockets		Through wiring surface mounting sockets
			Panel mounting sockets		Surface mounting sockets							
			metal	plastic	metal	plastic	metal	plastic	with single fixing centres	metal	plastic	plastic
100 to 130 V~ 50/60 Hz	16 A	2P+E	-	519 10	-	519 10 + 520 49	-	519 20	519 19	-	519 20 + 520 29[1]	519 20 + 520 89
200 to 250 V~ 50/60 Hz	16 A	2P+E	520 12	520 02	520 12 + 520 59	520 02 + 520 49	520 32	520 22[1]	520 18[1]	520 32 + 520 39	520 22[1] + 520 29[1]	520 22[1] + 520 89
	32 A	2P+E	-	527 02	-	527 02 + 529 49	527 32	-	527 18	527 32 + 529 39	527 18 + 529 40	527 18 + 529 90
380 to 415 V~ 50/60 Hz	16 A	3P+E	522 13	522 03	522 13 + 520 59	522 03 + 520 49	522 33	522 23[1]	522 19[1]	522 33 + 522 39[1]	522 23[1] + 522 29[1]	522 23[1] + 522 89
		3P+N+E	522 14	522 04	522 14 + 529 59	522 04 + 522 49	522 34	522 24[1]	522 20	522 34 + 522 39[1]	522 24[1] + 522 29[1]	522 24[1] + 522 89
	32 A	3P+E	529 13	529 03	529 13 + 522 59	529 03 + 529 49	529 33	-	529 19	529 33 + 529 39	529 19 + 529 40	529 19 + 529 90
		3P+N+E	529 14	529 04	529 14 + 522 59	529 04 + 529 49	529 34	-	529 20	529 34 + 529 39	529 20 + 529 40	529 20 + 529 90
	63 A	3P+E	538 00	536 03	538 00 + 538 09	536 03 + 537 49	538 33	538 23	-	537 33	537 23	538 23 + 538 89
		3P+N+E	538 01	536 04	538 01 + 538 09	536 04 + 537 49	538 34	538 24	-	537 34	537 24	538 24 + 538 89
480 to 500 V~ 50/60 Hz	16 A	3P+E	-	-	-	-	-	523 20	523 19	-	523 20 + 522 29[1]	523 20 + 522 89
	32 A	3P+E	-	-	-	-	-	-	523 59	-	523 59 + 529 40	523 59 + 529 90
ELV												
20 to 25 V~ 50/60 Hz	16 A	2P	-	-	-	-	-	524 01[1]	-	-	524 01[1] + 524 19[1]	-
	32 A	2P	-	-	-	-	-	525 01	-	-	525 01 + 524 19[1]	-

Pack = 1 except (1) pack = 5
(2) Dust resistance IP may be increased by rubber push-button (on request) - IP 55 cover closed or connected - IP 44 connected

FUNCTIONS

Straight plugs			Angled plugs			Mobile sockets		Panel appliance inlets		Surface appliance inlets	
											
metal	plastic	rubber	metal	plastic	rubber	metal	plastic	metal	plastic	metal	plastic
-	519 40	-	-	-	-	519 80	-	-	519 70	-	519 70 + 520 79
521 42	520 42(1)	520 52(1)	520 72	520 62(1)	521 52	520 82(1)	520 92	521 62	521 72	521 62 + 520 69	521 72 + 520 79
-	527 42	527 52	527 72	527 62		527 82	527 92	528 62	528 72	528 62 + 529 69	528 72 + 529 79
521 43	522 43(1)	522 53(1)	522 73	522 63(1)	521 53(1)	522 83(1)	522 93(1)	521 63	521 73	521 63 + 522 69	521 73 + 522 79
521 44	522 44(1)	522 54	522 74	522 64	521 54	522 84	522 94	521 64	521 74	521 64 + 522 69	521 74 + 522 79
528 43	529 43(1)	529 53(1)	529 73	529 63	528 53	529 83	529 93(1)	528 63	528 73	528 63 + 529 69	528 73 + 529 79
528 44	529 44(1)	529 54	529 74	529 64	528 54	529 84	529 94	528 64	528 74	528 64 + 529 69	528 74 + 529 79
-	538 43	538 53	538 73	-	538 63	538 83	538 93	537 63	537 73	537 63 + 538 69	537 73 + 538 79
-	538 44	538 54	538 74	-	538 64	538 84	538 94	537 64	537 74	537 64 + 538 69	537 74 + 538 79
-	523 21	-	-	-	-	523 22	-	-	-	-	-
-	523 61	-	-	-	-	523 62	-	-	-	-	-
-	524 21(1)	-	-	-	524 41(1)	524 81	524 61	-	-	-	-
-	525 21	-	-	-	525 41	525 81	525 61	-	-	-	-



Special voltages and frequencies available on request

Please consult us

Legrand System

These products are part of industrial equipment > See p. 266-267

Hypra® IP 66/67-55 plastic - increased safety
LV 16 to 125 A

63 A and 125 A easy connection disconnection

Conform to IEC 60309-1 and IEC 60309-2
IP according to IEC 60529
IK 09: Plastic
Self-extinguishing: 850°C (support of active parts) / 650°C (plastic housing)

Dimensions (p. 402)

LV			FUNCTIONS									
			Panel mounting sockets		Surface mounting sockets	Through wiring surface mounting sockets	Straight plugs	Angled plugs	Mobile sockets	Surface appliance inlets	Straight panel appliance inlets	Socket with break isolatine switch
												
			inclined outlets	with single fixing centres								
200 to 250 V~ 50/60 Hz	16 A	2P+E	511 26[1]	511 46	511 26 + 520 29[1]	511 26 + 520 89	511 56[1]	511 06	511 76	511 86	-	-
	32 A	2P+E	-	530 46	530 46 + 529 40	530 46 + 529 90	530 56	530 06	530 76	530 86	-	-
380 to 415 V~ 50/60 Hz	16 A	3P+E	511 30	511 50	511 30 + 522 29[1]	511 30 + 522 89	511 60[1]	511 10	511 80	511 90	-	-
		3P+N+E	511 31	511 51	511 31 + 522 29[1]	511 31 + 522 89	511 61[1]	511 11	511 81	511 91	-	-
	32 A	3P+E	-	530 50	530 50 + 529 40	530 50 + 529 90	530 60	530 10	530 80	530 90	-	-
		3P+N+E	-	530 51	530 51 + 529 40	530 51 + 529 90	530 61	530 11	530 81	530 91	-	-
	63 A	3P+E	594 27	-	594 37	594 27 + 538 89	594 47	-	594 87	-	594 77[2]	-
		3P+N+E	594 28	-	594 38	594 28 + 538 89	594 48	-	594 88	-	594 78[2]	-
	125 A	3P+E	595 12	-	595 02	-	595 22	-	595 32	-	595 42	591 14
		3P+N+E	595 13	-	595 03	-	595 23	-	595 33	-	595 43	591 15

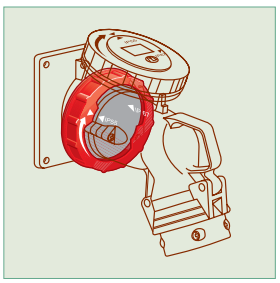

When connected[3], IP 55 guaranted with the cover closed

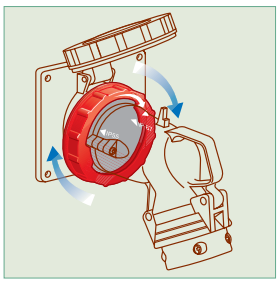

IP 66/67 obtained with the ring locked



When not connected IP 55 automatically assured when cover is closed IP 66/67 obtained with the ring locked

Pack = 1 except (1) pack = 5
(2) Can be fixed on Cat.No 538 89 to obtain a straight surface mounting appliance inlet
(3) With a pair of Hypra IP 66/67-55 products

Red catalogue numbers: New products

Hypra® IP 44 and IP 44/55 Prisinter™
LV 16 to 125 A

■ Prisinter - panel mounting sockets - LV 16-32-63 A (p. 398)

Terminal connection (max.)
BT 16 A : rigid - 1 x 4 mm²
BT 32 A : rigid - 1 x 10 mm²
BT 63 A : rigid - 1 x 25 mm²
Prisinter sockets 32 A : flexible - 1 x 6 mm²
Prisinter sockets 63 A : flexible - 1 x 16 mm²
Conform to EN 60309-1, NF EN 60309-2, IEC 60309-1 and IEC 60309-2
IK 09 : plastic and rubber
IK 10 : metal according to EN 62262 et IEC 62262
Self-extinguishing :
850 °C support of active parts, 950 °C for Prisinter
650 °C plastic honsing
- 50 °C à + 100 °C (- 20 °C pour les Prisinter)
Icc 10 kA according to EN 60309-1 and IEC 60309-1
Dust resistance IP may be increased by rubber push-button (on request)

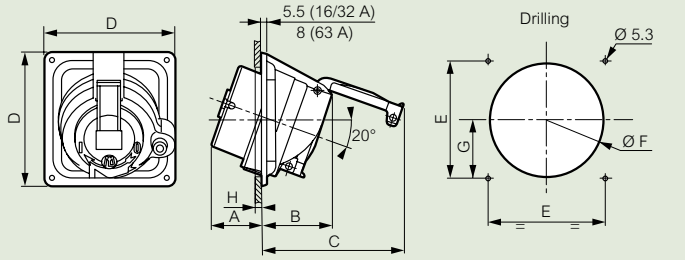

	Material	Weight (kg)	A	B	C	D	E	F min	F max	G	H max
16 A											
2P+E	Plastic	0.42	46	70	132	115	100	92	98	46	6 to 10
	Metal	1.25									
3P+E	Plastic	0.48	46	70	138	115	100	92	96	46	6 to 10
	Metal	1.33									
3P+N+E	Plastic	0.57	46	75	156	125	110	102	106	51.5	7
	Metal	1.47									
32 A											
2P+E	Plastic	0.57	54	77	153	143	125	115	122	58.5	10 to 20
	Metal	1.47									
3P+E	Plastic	0.61	54	77	153	143	125	115	122	58.5	10 to 20
	Metal	1.5									
3P+N+E	Plastic	0.65	55	79	169	143	125	119	122	58.5	9 to 13
	Metal	1.8									
63 A											
2P+E	Plastic	0.87	55	99	205	143	125	120	122	59.5	10 to 20
	Metal	1.5									
3P+E	Plastic	0.95	55	99	205	143	125	120	122	59.5	10 to 20
	Metal	1.85									
3P+N+E	Plastic	0.98	55	99	205	143	125	120	122	59.5	10 to 20
	Metal	2.2									

Breaking capacity 3 x 400 V~ according to IEC 60947-1-3

Category	16 A	32 A	63 A	Category	125 A	
AC 1	16 A	32 A	63 A	**AC 22 AC 23**	400 V	70 kW
AC 23	8.4 kW	16.8 kW	33 kW		500 V	87 kW
AC 3					600 V	120 kW

■ Reversible box for Prisinter sockets

LV 16 A (p. 398)

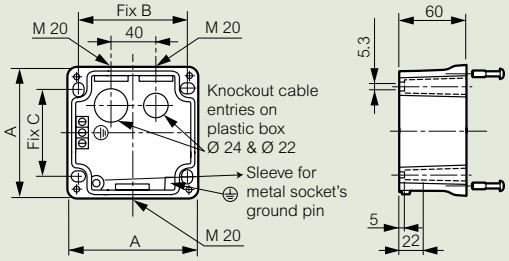

3 entries among which
2 entries M20 sealed with B20P blanking plug for auxiliary contact use
Fitted with 2 connected earth terminals and 1 outside terminal on metal box

	Material	Weight (kg)	A (mm)	B (mm)	C (mm)
2P+E	Plastic	0.14	115	97	78
3P+E	Metal	0.8			
3P+N+E	Plastic	0.16	125	107	88
	Metal	0.9			

LV 32 A (p. 398)

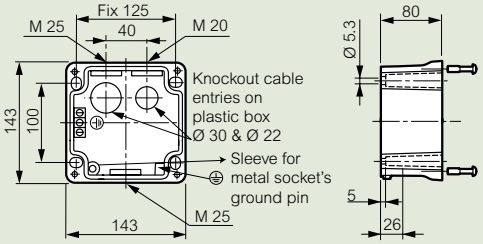

3 entries among which
1 M20 sealed with B20P blanking plug for auxiliary contact
1 M25 sealed with B25P blanking plug
Fitted with 2 connected earth terminals and 1 outside terminal on metal box

LV 63 A (p. 398)

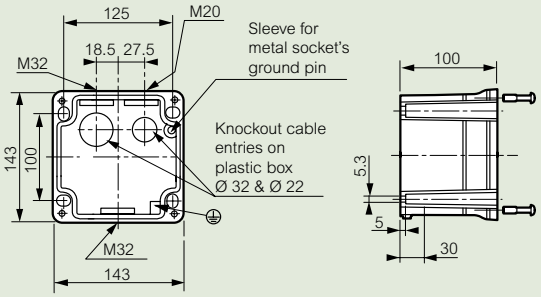

3 entries among which
1 M20 sealed with B20P blanking plug for auxiliary contact
1 M32 sealed with B32P blanking plug
Fitted with 1 outside earth terminal on metal box



Dust resistance IP can be increased by a rubber push-button

on special request

Hypra® IP 44, IP 66/67-55 panel mounting sockets

LV 16 to 125 A and ELV 16 and 32 A

■ Dimensions

IP 44 - LV 16 to 63 A (p. 398) and ELV 16 and 32 A

External screws in stainless steel - Nickel-plated contacts
Enable realization of surface mounting sockets, associated with reversible box

Terminal connection (max.):
- LV 16 A: 1 x 4 mm² rigid
- LV 32 A: 1 x 10 mm² rigid
- LV 63 A: 1 x 25 mm² rigid
- ELV: 1 x 10 mm² rigid

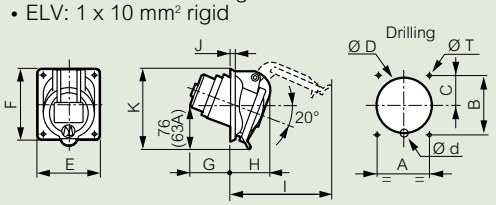

	Material	Weight (kg)	Drilling						Dimensions						
			A	B	C	ØD	Ød	ØT	E	F	G	H	I	J	K
LV - 16 A															
2P+E	Plastic	0.110	52	60	28	55	14.5	4.2	64	72	41	40	94	5.5	78.5
	Metal	0.340													
3P+E	Plastic	0.140	60	70	31	63.5	14.5	5.2	74	84	44	40	98	5.5	88
	Metal	0.405													
3P+N+E	Plastic	0.165	60	70	33	70.6	-	5.2	80	84	44	44	110	5.5	93
	Metal	0.450													
LV - 32 A															
2P+E/ 3P+E	Metal	0.605	70	80	38	76.2	10	5.2	84	94	50	53	120	5.5	103
3P+N+E	Metal	0.660	70	80	38	76.2	10	5.2	84	94	52	56	124	5.5	107
LV - 63 A															
2P+E	Plastic	0.600	77	85	-	92	-	6.5	106	106	98	70	160	6	129
	Metal	0.950													
3P+E	Plastic	0.640													
	Metal	1.000													
3P+N+E	Plastic	0.700													
	Metal	1.200													
ELV-16/32 A															
2P	Plastic	0.120	52	60	30	55	-	4.2	64	72	33	47	94	5.5	78.5

IP 44 - LV 16 and 32 A with single fixing centres (p. 398)

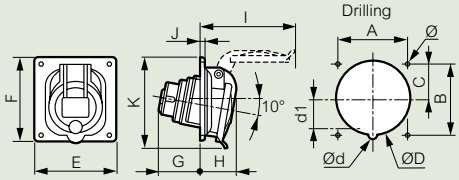

	Weight (kg)	A	B	C	ØD	Ød	d1	E	F	G	H	I	J	K	Ø
LV 16 A															
2P+E	0.110	70	70	35	76.2	/	/	84	84	37	36	89	4.5	88	4.2
3P+E	0.140	70	70	35	76.2	/	/	84	84	43	36	97	4.5	89	4.2
3P+N+E	0.165	70	70	35	76.2	/	/	84	84	43	37	106	4.5	91	4.2
LV - 32 A															
2P+E/ 3P+E	0.220	70	70	35	76.2	–	–	84	94	54	45	117	4.5	100	4.2
3P+N+E	0.255	70	70	35	76.2	8	36	84	94	54	46	125	4.5	102	4.2

IP 66/67-55 - LV 16 A (p. 400)

External screws in stainless steel - Nickel-plated contacts
Terminal connection (max.): 1 x 4 mm² rigid or flexible

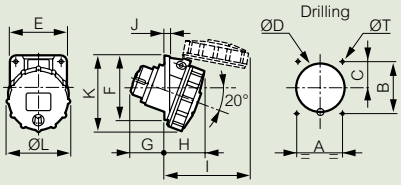

	Weight (kg)	Drilling					Dimensions							
		A	B	C	ØD	ØT	E	F	G	H	I	J	K	L
LV - 16 A														
2P+E	0.140	52	60	33	55	4.2	64	72	40	45	91	5.5	87	72.5
3P+E	0.165	60	70	39	63.5	5.2	74	84	41	48	102	5.5	96	81
3P+N+E	0.195	60	70	37	70.6	5.2	80	84	42	50	106	5.5	96	86.5

IP 66/67-55 - LV 63 and 125 A (p. 400)

Terminal connection (max.):
- 63 A: 1 x 25 mm² rigid
- 125 A: 1 x 70 mm² rigid

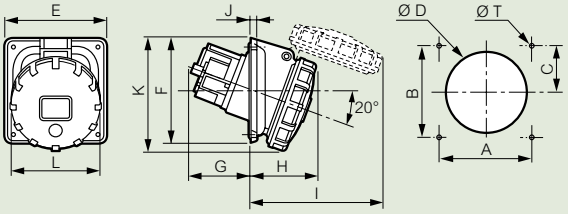

	Weight (kg)	Drilling					Dimensions							
		A	B	C	ØD	ØT	E	F	G	H	I	J	K	ØL
LV - 63 A														
2P+E	0.680													
3P+E	0.710	77	85	42.5	92	6.5	106	106	98	79	158	6	127	113.5
3P+N+E	0.770													
LV - 125 A														
3P+E	1.400	124	124	62	120	6.5	146	146	84	93	182	8	157	131
3P+N+E	1.550													

IP 66/67-55 - LV 16 and 32 A with single fixing centres (p. 400)

Terminal connection (max.):
- 16 A: 1 x 4 mm² rigid
- 32 A: 1 x 10 mm² rigid

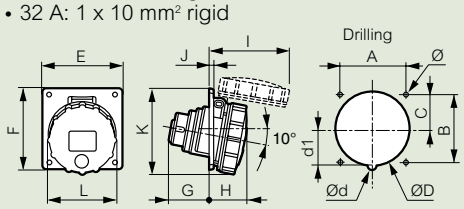

	Weight (kg)	Drilling							Dimensions (mm)							
		A	B	C	ØD	Ød	d1	Ø	E	F	G	H	I	J	K	ØL
LV 16 A																
2P+E	0.140	70	70	35	76.2	-	-	4.2	84	84	42	39	83	4.5	90	72.5
3P+E	0.165	70	70	35	76.2	-	-	4.2	84	84	43	41	98	4.5	93	81
3P+N+E	0.195	70	70	35	76.2	-	-	4.2	84	84	43	41	99	4.5	91	86.5
LV 32 A																
2P+E	0.240	70	70	35	76.2	-	-	4.2	84	94	54	50	113	4.5	101	94.5
3P+E	0.240	70	70	35	76.2	-	-	4.2	84	94	54	50	113	4.5	101	94.5
3P+N+E	0.270	70	70	35	76.2	8	36	4.2	84	94	54	51	120	4.5	103	101

For more information, please consult e-catalogue www.legrandelectric.com

Hypra® IP 44, IP 66/67-55 surface mounting sockets reversible box

LV 16 to 63 A and ELV 16 and 32 A

■ Dimensions

IP 44 ELV 16 and 32 A - IP 44, IP 66/67-55 - LV 16 A (p. 398, 400)

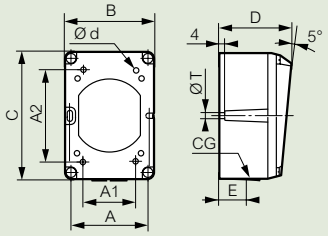

Fix A1 and A2:
Blind optional fixing points
Metal boxes fitted with
- 2 connected earth terminals and 1 outside terminal
- 1 sleeve for metal socket's ground pin

Surface mounting sockets → Panel mounting sockets ↓	Material	Weight (kg)	Drilling					Dimensions				CG cable gland
			A1	A2	Ød	A	ØT	B	C	D	E	
IP 44 - ELV 16/32 A												
2P+E	Plastic	0.115	51	68	4.2	64	5.3	74	106	58	20	M 25
IP 44 and IP 66/67-55 - LV 16 A												
2P+E	Plastic	0.115	51	68	4.2	64	5.3	74	106	58	20	M 20
	Metal	0.400										
3P+E/ 3P+N+E	Plastic	0.160	68	68	4.2	85	5.3	96	122	60	22	M 20
	Metal	0.520										

IP 44, IP 66/67-55 - LV 32 A (p. 398, 400)

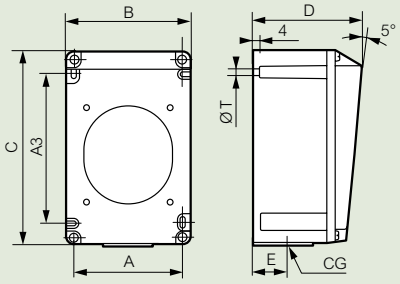

Blind optional fixing points
Metal boxes fitted with
- 2 connected earth terminals and 1 outside terminal
- 1 sleeve for metal socket's ground pin

Surface mounting sockets → Panel mounting sockets ↓	Material	Weight (kg)	Drilling			Dimensions				CG cable gland
			A	A3	ØT	B	C	D	E	
IP 44 and IP 66/67-55 - LV 32 A										
2P+E/ 3P+E/ 3P+N+E	Plastic	0.340	90	125	5.3	102	162	90	26	M 25
	Metal	0.910								

Hypra® IP 44, IP66/67-55 and IP 66/67 through wiring surface mounting sockets

■ Dimensions

IP 44 - LV 16 to 63 A, IP 66/67-55 - LV 16 and 32 A, IP 66/67 - LV 63 A (p. 398, 400)

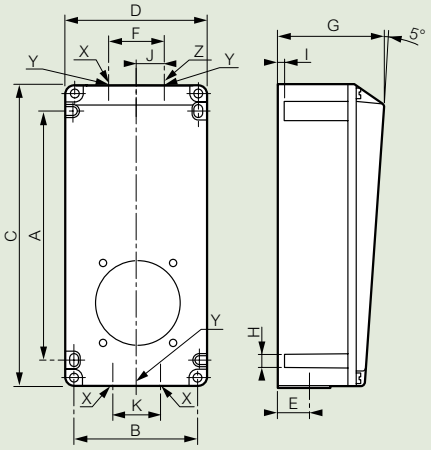

Plastic boxes fitted with 2 connected earth terminals
Metal boxes fitted with
- 2 connected earth (16/32 A) terminals and 1 outside terminal
- 1 sleeve for metal socket's ground pin
- 3 connected earth (63 A) terminals

Surface mounting sockets → Panel mounting sockets ↓	Material	Weight (kg)	Drilling			Dimensions											
			A	B	H	C	D	E	F	G	I	J	K	X	Y	Z
16 A																	
2P+E	Plastic	0.330	145	74	5.3	182	86	22	34	75	4	-	-	-	M 20	
	Metal	0.830															
3P+E/ 3P+N+E	Plastic	0.440	175	88	5.3	212	100	22	40	77	4	-	-	-	M 20	-
	Metal	0.980															
32 A																	
2P+E/ 3P+E/ 3P+N+E	Plastic	0.670	234	117	5.3	270	130	30	50	120	4	-	-	-	M 25	-
	Metal	1.730															
63 A (Panel appliance inlets 63 A can be fixed)																	
2P+E/ 3P+E/ 3P+N+E	Plastic	2.000	260	152	6.3	300	170	40	-	150	8	50	70	M 32	-	M 20
	Metal	4.300		157												

Hypra® IP 44 and IP 66/67-55 surface mounting sockets

External screws in stainless steel - Nickel-plated contacts

IP 44 - LV 63 A (p. 398)

Terminal connection: 1 x 25 mm² rigid max.

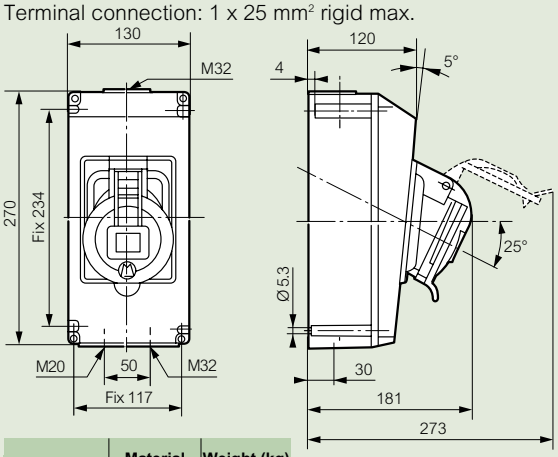

	Material	Weight (kg)
3P+E	Plastic	1.45
	Metal	4.95
3P+N+E	Plastic	1.5
	Metal	5

IP 66/67-55 - LV 63 A (p. 400)

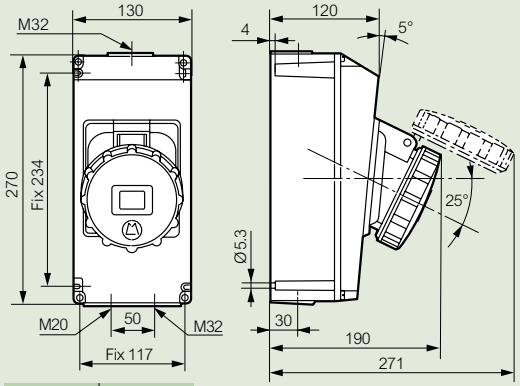

	Weight (kg)
2P+E	1.500
3P+E	1.550
3P+N+E	1.600

IP 66/67-55 - LV 125 A (p. 400)

Terminal connection: 1 x 70 mm² rigid max.

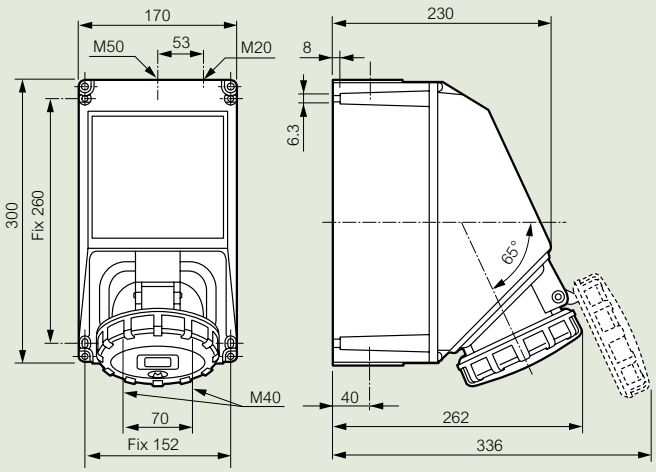

	Weight (kg)
3P+E	3.5
3P+N+E	3.7

Hypra® IP 44 - panel appliance inlets and reversible boxes

External screws in stainless steel - Nickel-plated contacts

■ Panel appliance inlets (inclined)

IP 44: LV 16, 32 and 63 A (p. 398)

Terminal connections:
- 16 A: 1 x 2.5 mm² max. rigid
- 32 A: 1 x 6 mm² max. rigid
- 63 A: 1 x 25 mm² max. rigid

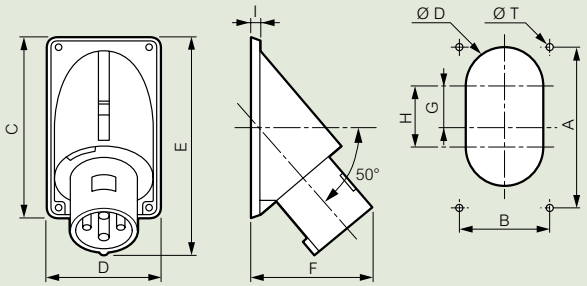

	Material	Weight (kg)	Drilling					Dimensions					
			A	B	ØT	ØD	G	H	C	D	E	F	I
LV - 16 A													
2P+E	Plastic	0.140	94	62	4.5	40	-	-	104	72	121	78	6
	Metal	0.530											
3P+E	Plastic	0.160	109	83	4.5	40	-	-	120	94	135	86	6
	Metal	0.630											
3P+N+E	Plastic	0.190									139		
	Metal	0.690											
LV - 32 A													
2P+E/ 3P+E	Plastic	0.280	149	90	5.5	40	-	-	160	101	176	111	6
	Metal	0.950											
3P+N+E	Plastic	0.320									174	108	
	Metal	1.000											
LV - 63 A													
2P+E	Plastic	0.560	163	93	6.5	80	42	62	183	113	221	120	8
3P+E	Plastic	0.630											
	Metal	2.230											
3P+N+E	Plastic	0.690											
	Metal	2.450											

■ Reversible boxes for surface appliance inlets

LV 16 A (p. 399)

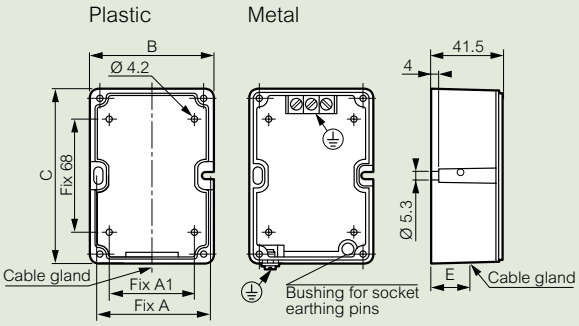

Fix A1 and Fix 68 :
Blind optional fixing points

	Material	Weight (kg)	A	A1	B	C	E	Cable gland
2P+E	Plastic	0.085	64	51	74	106	20	M20
	Metal	0.250					22	
3P+E	Plastic	0.110	85	68	96	122	22	M20
3P+N+E	Metal	0.360						

Hypra® IP 44 and IP 66/67-55 - appliance inlets and reversible boxes

LV 32 A (p. 399)

Fitted with 2 connected earth terminals and 1 outside terminal on metal box

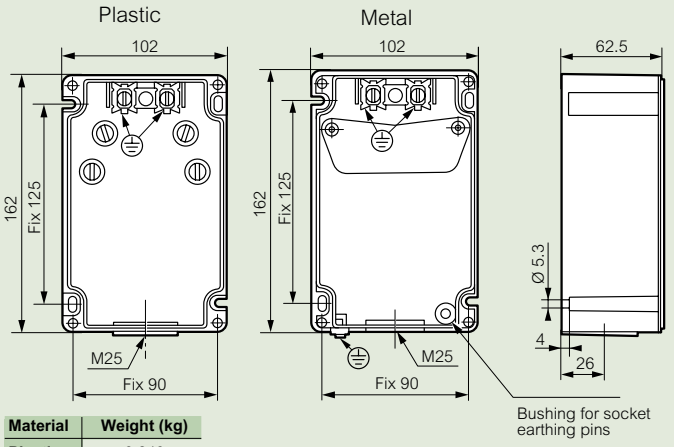

Material	Weight (kg)
Plastic	0.240
Metal	0.650

LV 63 A (p. 399)

Fitted with 2 connected earth terminals and 1 outside terminal on metal box

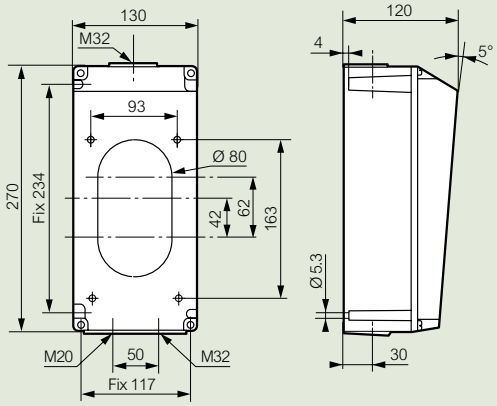

Material	Weight (kg)
Plastic	0.67
Metal	1.73

■ Surface mounting appliance inlets

IP 66/67-55 - LV 16 and 32 A (p. 400)

Terminal connections:
- 16 A: 1 x 2.5 mm² max. rigid
- 32 A: 1 x 6 mm² max. rigid

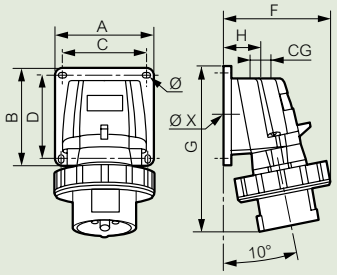

	Weight	A/B	C/D	F	G	H	CG cable gland	Ø	ØX
16 A									
2P + E	0.188	84	72	87	126	34	M 20	4.3	17
3P + E	0.257			95	134				
3P+N+ E	0.297			100	141				
32 A									
2P + E	0.370	110	98	107	168	39	M 25	5.3	24
3P + E									
3P+N+ E	0.413			113					

Hypra® IP 66/67-55 - appliance inlets and sockets with break isolating switch

■ Panel mounting appliance inlets

External screws in stainless steel - Nickel-plated contacts

IP 66/67-55 - 63 A (p. 400)

Can be fixed on box Cat.No 538 89 (p. 398)
Terminal connection: 1 x 16 mm² max. rigid

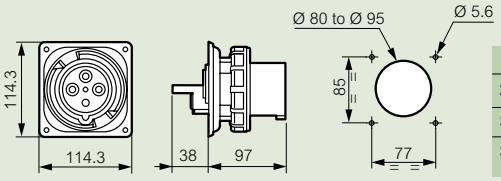

	Weight (kg)
2P+E	0.490
3P+E	0.548
3P+N+E	0.610

IP 66/67-55 - 125 A (p. 400)

Terminal connection: 1 x 50 mm² max. rigid

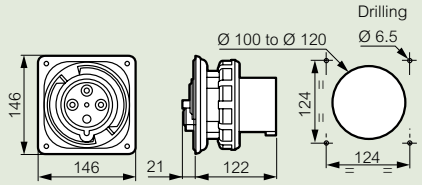

	Weight (kg)
3P+E	1.00
3P+N+E	1.15

■ Socket with break isolating switch

IP 66/67-55 - LV 125 A (p. 400)

IP 67 according to IEC and EN 60529
Icc 10 kA according to IEC and EN 60309-1
Panel mounting sockets: IK 09 according to IEC and EN 62262
External screws in stainless steel

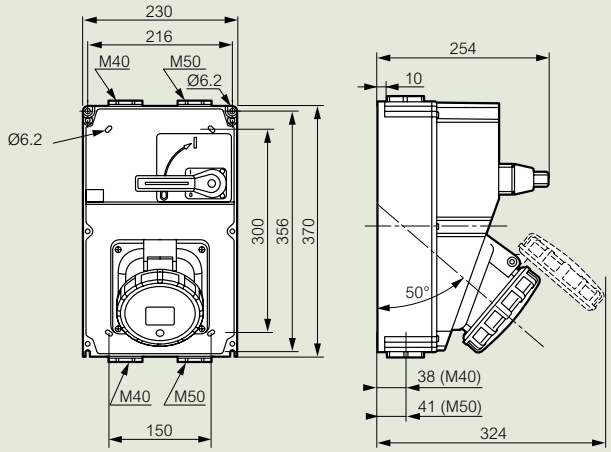

Hypra® IP 44 and IP66/67-55 straight and angled plugs

LV 16 to 125 A and ELV 16 and 32 A

■ Characteristics

External screws in stainless steel - Nickel-plated contacts
Terminal connection:
- LV 16 A: 1 x 2.5 mm² max. flexible
- LV 32 A: 1 x 6 mm² max. flexible
- LV 63 A: 1 x 16 mm² max. flexible
- LV 125 A: 1 x 50 mm² max. flexible
- ELV 16/32 A: 1 x 10 mm² max. flexible

■ Dimensions

Straight plugs IP 44

LV and ELV 16/32 A (p. 399)

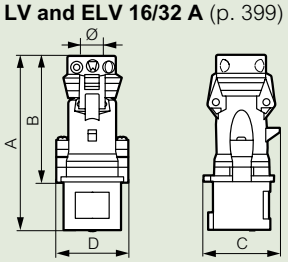

LV 63 A (p. 399)

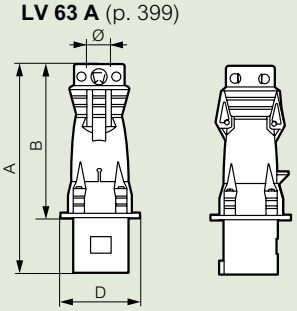

	Material	Weight (kg)	Dimensions (mm) A	B	C	D	Ø clamping and grip
LV 16 A							
2P+E	Plastic	0.150	135	100	57	55	8 to 15
	Metal	0.365					
	Rubber	0.205	135	100	60	61	8 to 15
3P+E	Plastic	0.175	139	103	65	60	8 to 15
	Metal	0.425					
	Rubber	0.260	139	103	68	66	8 to 15
3P+N+E	Plastic	0.210	154	118	73	66	10 to 18
	Metal	0.535					
	Rubber	0.300	154	118	77	72	10 to 18
LV 32 A							
2P+E	Plastic	0.260	164	119	78	70,5	10 to 18
	Metal	0.645					
	Rubber	0.360	164	119	81	76,5	10 to 18
3P+E	Plastic	0.260	164	119	78	70,5	12 to 22
	Metal	0.645					
	Rubber	0.360	164	119	81	76,5	12 to 22
3P+N+E	Plastic	0.300	170	125	86	77	12 to 22
	Metal	0.685					
	Rubber	0.415	170	125	89	83	12 to 22
LV 63 A							
2P+E	Plastic	0.580	255	188.5	-	102	16 to 26
	Rubber	0.900	255	188.5	-	110	16 to 26
3P+E	Plastic	0.640	255	188.5	-	102	18.5 to 29
	Rubber	0.980	255	188.5	-	110	18.5 to 29
3P+N+E	Plastic	0.700	255	188.5	-	102	20.5 to 32
	Rubber	1.050	255	188.5	-	110	20.5 to 32
ELV 16/32 A							
2P	Plastic	0.180	142	107	62	55	8.5 to 22

Straight plugs IP 66/67-55

LV 16/32 A (p. 400)

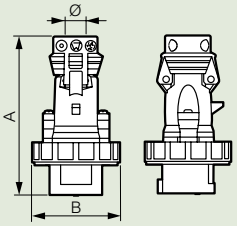

	Weight (kg)	Dimensions (mm) A	B	Ø clamping and grip
16 A				
2P+E	0.165	135	72.5	8 to 15
3P+E	0.195	139	81	8 to 15
3P+N+E	0.220	154	86.5	10 to 18
32 A				
2P+E	0.280	164	94.5	10 to 18
3P+E	0.280	164	94.5	12 to 22
3P+N+E	0.325	170	101	12 to 22

Straight plugs IP 66/67-55

LV 63 A (p. 400)

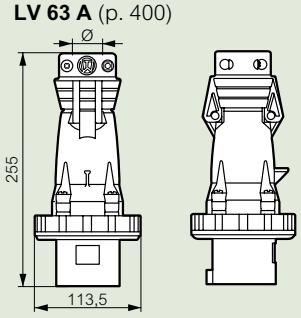

	Weight (kg)	Ø clamping and grip
2P+E	0.620	16 to 26
3P+E	0.680	18.5 to 29
3P+N+E	0.750	20.5 to 32

LV 125 A (p. 400)

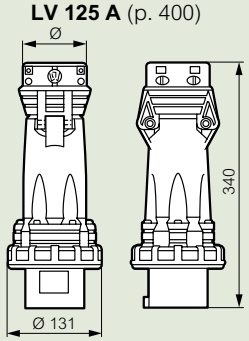

	Weight (kg)	Ø clamping and grip
3P+E	1.5	24 to 48
3P+N+E	1.7	28 to 48

Angled plugs IP 44

LV and ELV 16 and 32 A (p. 399)

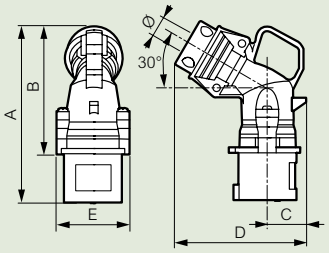

LV 63 A (p. 399)

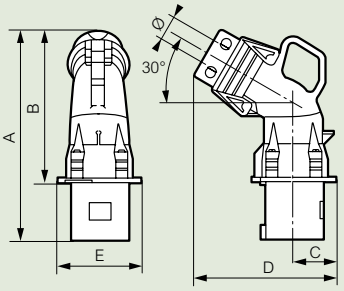

	Material	Weight (kg)	Dimensions (mm) A	B	C	D	E	Ø clamping and grip
LV 16 A								
2P+E	Plastic	0.145	136	100	29.5	100	55	8 to 15
	Metal	0.395						
	Rubber	0.230	136	100	29.5	100	61	8 to 15
3P+E	Plastic	0.185	141	105	33.5	105	60	8 to 15
	Metal	0.455						
	Rubber	0.290	141	105	33.5	105	66	8 to 15
3P+N+E	Plastic	0.220	150	114	37.5	114	66	10 to 18
	Metal	0.585						
	Rubber	0.330	150	114	37.5	114	72	10 to 18
LV 32 A								
2P+E	Plastic	0.275	161	116	39.5	116	70.5	10 to 18
	Metal	0.745						
	Rubber	0.390	161	116	39.5	116	76.5	10 to 18
3P+E	Plastic	0.275	161	116	39.5	116	70.5	12 to 22
	Metal	0.745						
	Rubber	0.390	161	116	39.5	116	76.5	12 to 22
3P+N+E	Plastic	0.320	167	122	44.5	122	77	12 to 22
	Metal	0.790						
	Rubber	0.435	167	122	44.5	122	83	12 to 22
LV 63 A								
2P+E	Metal	0.100	243.5	177	51	168	102	16 to 26
3P+E	Metal	1.150	243.5	177	51	168	102	18.5 to 29
	Rubber	1.030	243.5	177	51	168	110	18.5 to 29
3P+N+E	Metal	1.250	243.5	177	51	168	102	20.5 to 32
	Rubber	1.100	243.5	177	51	168	110	20.5 to 32
ELV 16/32 A								
2P	Rubber	0.250	131	107	30	107	61	8.5 to 22

Angled plugs IP 66/67-55

LV 16-32 A - plastic (p. 400)

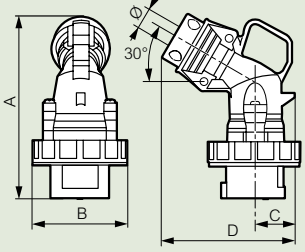

	Weight (kg)	Dimensions (mm) A	B	C	D	Ø clamping and grip
16 A						
2P+E	0.165	136	72.5	29.5	100	8 to 15
3P+E	0.195	141	81	33.5	105	8 to 15
3P+N+E	0.220	150	86.5	37.5	114	10 to 18
32 A						
2P+E	0.280	161	94.5	39.5	116	10 to 18
3P+E	0.280	161	94.5	39.5	116	12 to 22
3P+N+E	0.325	167	101	44.5	122	12 to 22

Hypra® IP 44, IP 66/67-55 mobile sockets

■ Characteristics

External screws in stainless steel - Nickel-plated contacts
Icc 10 kA according to IEC 60309-1

■ Dimensions

Mobile sockets IP 44 - **LV and ELV 16 - 32 A** (p. 399)
Terminal connections:
- LV 16 A: 1 x 2.5 mm² max. flexible
- LV 32 A: 1 x 6 mm² max. flexible
- ELV 16/32 A: 1 x 10 mm² max. flexible

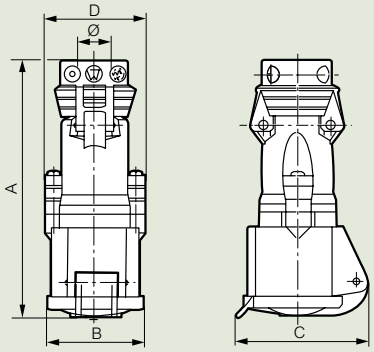

LV 63 A (p. 399)
Terminal connection: 1 x 16 mm² max. flexible

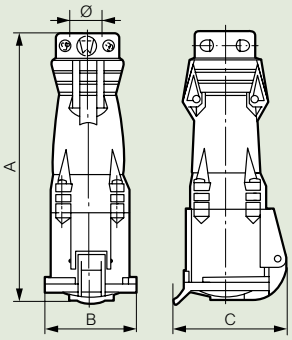

	Material	Weight (kg)	Dimensions (mm) A	B	C	D	Ø clamping and grip
LV 16 A							
2P+E	Plastic	0.170	147	54.5	74	55	8 to 15
	Rubber	0.250	147	58	74	61	8 to 15
3P+E	Plastic	0.200	151	61.5	81	60	8 to 15
	Rubber	0.285	151	65	81	66	8 to 15
3P+N+E	Plastic	0.245	172	69.5	90	66	10 to 18
	Rubber	0.335	172	72.5	90	72	10 to 18
LV 32 A							
2P+E	Plastic	0.300	177	71	93	70.5	10 to 18
	Rubber	0.400	177	74.5	93	76.5	10 to 18
3P+E	Plastic	0.300	177	71	93	70.5	12 to 22
	Rubber	0.400	177	74.5	93	76.5	12 to 22
3P+N+E	Plastic	0.350	183	77.5	100	77	12 to 22
	Rubber	0.475	183	80.5	100	83	12 to 22
LV 63 A							
2P+E	Plastic	0.700	273	96	119	-	16 to 26
	Rubber	1.200	273	110	124	-	16 to 26
3P+E	Plastic	0.770	273	96	119	-	18.5 to 29
	Rubber	1.300	273	110	124	-	18.5 to 29
3P+N+E	Plastic	0.830	273	96	119	-	20.5 to 32
	Rubber	1.400	273	110	124	-	20.5 to 32
ELV 16/32 A							
2P / 3P	Plastic	0.190	148	54.5	74	55	8.5 to 22
2P	Rubber	0.240	148	58	74	61	8.5 to 22

Mobile sockets IP 66/67-55 (p. 400)

LV 16 - 32 A
Terminal connections:
- LV 16 A: 1 x 2.5 mm² max. flexible
- LV 32 A: 1 x 6 mm² max. flexible

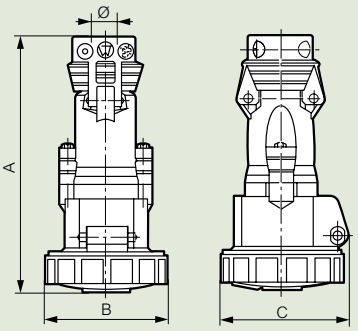

LV 63 A
Terminal connection: 1 x 16 mm² max. flexible

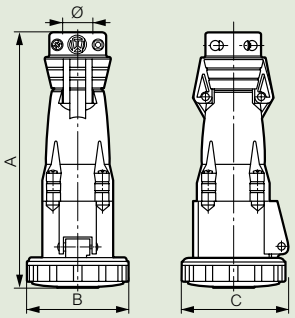

	Material	Weight (kg)	Dimensions A	B	C	Ø clamping and grip
LV 16 A						
2P+E	Plastic	0.180	150	72.5	75.5	8 to 15
3P+E	Plastic	0.215	154	81	86	8 to 15
3P+N+E	Plastic	0.275	169	86.5	89	10 to 18
LV 32 A						
2P+E	Plastic	0.320	179	94.5	99	10 to 18
3P+E	Plastic	0.320	179	94.5	99	12 to 22
3P+N+E	Plastic	0.375	185	101	105	12 to 22
LV 63 A						
2P+E	Plastic	0.780	278	113.5	119	16 to 26
3P+E	Plastic	0.850	278	113.5	119	18.5 to 29
3P+N+E	Plastic	0.910	278	113.5	119	20.5 to 32

LV 125 A (p. 400)
Terminal connection: 1 x 50 mm² max. flexible

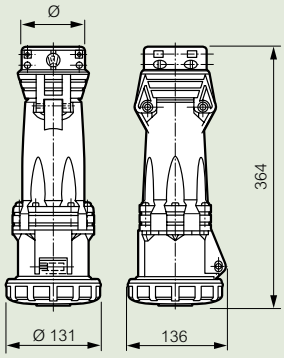

	Weight (kg)	Ø clamping and grip
125 A		
3P+E	1.8	24 to 48
3P+N+E	2.0	28 to 48

Hypra® IP 66/67-55

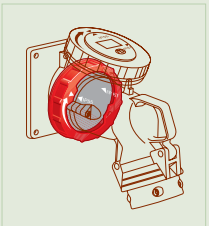

When connected(1), IP 55 guaranted with the cover closed

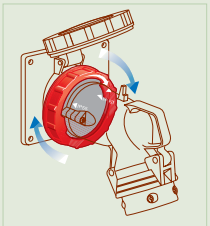

IP 66/67 obtained with the ring locked



When not connected IP 55 automatically assured when cover is closed IP 66/67 obtained with the ring locked

(1) With a pair of IP 66/67-55 products

bells for industrial and alarm use

electromechanical sirens



414 62 413 49



414 19



415 23



415 33 with claws

Class I

Double insulated
Polyester corrosion resistant finish
200 hours maxi. continuous rating

IP 44 - IK 10 - Direct current version

Ø150 mm gong

Pack	Cat.Nos	Voltage ⎓	Average Consumption (mA)	Average acoustic output at 1 m (dB)	Weight (kg)
	RAL 3000 Red				
1	414 62	24 V	70	90	1

IP 40 - IK 08 - 50/60 Hz - Alternating current version

Ø100 mm gong

Pack	Cat.Nos	Voltage ∿	Consumption (mA)	Average acoustic output at 1 m (dB)	Weight (kg)
	RAL 7037 Grey				
1	413 49	230 V	50	95	0.8

IP 44 - IK 10

Ø150 mm gong

Pack	Cat.Nos	Voltage ∿	Consumption (mA)	Average acoustic output at 1 m (dB)	Weight (kg)
1	414 16	24V	360	98	1
1	414 18	110/130 V	90	98	1
1	414 19	230 V	50	98	1
		Ø250 mm gong			
1	414 39	230 V	70	98	2.1

Industrial warning devices 110 dB IP 20 - IK 08

Frequency 350/400 Hz, continuous sound
Operates intermittently: 1 min on / 10 min off

Pack	Cat.Nos		Consumption in mA
1	415 20	24 V∿ and ⎓ power supply:	820
1	415 23	230 V∿ power supply:	120

Electromechanical sirens IP 30 - IK 05

Supplied with screws for semi-flush mounting

D.C. current

Pack	Cat.Nos	Voltage ⎓	Power (W)	Consumption (mA)	Average acoustic output at 1 m (dB)	Weight (kg)	Max. continuous rating (hr)
1	415 32	12 V	11	889	98	0.2	200
1	415 33	24 V	12	516	100	0.2	200
		A.C. current - 50/60 Hz					
1	415 36	24 V	12.5	531	100	0.2	200
1	415 38	110 V	70	400	105	0.35	100
1	415 39	230 V	57	250	105	0.35	100

Multi-sound electronic sirens

97 to 106 dB
16 electronic sounds possible for identification of each defined event
Easy to identify and select sounds for each appliance using coded wheel
Adjustable sound level

Pack	Cat.Nos	
1	415 45	230 V∿, IP 44 - IK 07

illuminated signalling

electromechanical sirens



413 08



413 14

Pack	Cat.Nos	Rotating lights	Consumption (mA)
		Halogen lamp 20 W (supplied) Light intensity: 1 500 Cd (p) Screw-mounting Dim.: height 185 mm, Ø140 mm IP 65 - IK 10	
1	413 08	230 V∿, orange	300

		Halogen lamp	
10	413 62	BA9 S H 12 V - 20 W: rotating lights Cat.No 413 08	

		Flashing light	
		Xenon lamp 2 joules 1 Flash (supplied) Light intensity: 1 050 Cd (p) Screw-mounting Dim.: height 185 mm, Ø140 mm IP 65 - IK 10	
1	413 57	230 V∿, red	72

		Blinking or steady lights Environmental high quality LEDs	
		Screw-mounting Dim. height: 85 mm, Ø105 mm Equipped with 16 LEDs Ø5 mm, high brightness, low consumption Light intensity: 55 Cd(p)	
		Colour and voltage (∿)	Consumption (mA)
1	413 09	Orange, 24 V ac/dc	90
1	413 13	Red, 24 V ac/dc	90
1	413 10	Orange, 230 V ac	20
1	413 14	Red, 230 V ac	20

■ Dimensions

Electromechanical sirens
Cat.Nos 415 32/33/36/38/39

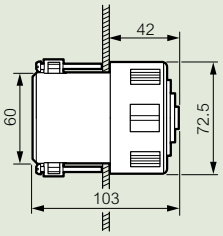

Multi-sound electronic sirens
Cat.No 415 45

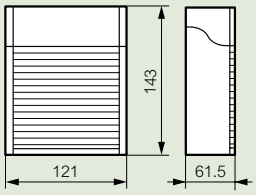

■ Selection chart of sounds (Cat.No 415 45)

Type of signal	Exemple of application	Position of code	Sound level (in Db at 1m) max.	Sound level (in Db at 1m) min.	Frequency in Hz	Consumption in mA
Danger	Moving equipment or vehicle	0	98	68	2400 to 2800	70
		1	102	73	1000 to 1500	45
	Interruption of a dangerous manufacturing process	2	98	70	2400 to 2800	75
		3	98	70	2400 to 2800	50
		4	99	72	2400 to 2800	100
		5	104	75	2400 to 2800	100
Defect	Interruption of a non-dangerous manufacturing process	6	102	70	1000 to 1500	30
		7	97	68	1000 to 1500	30
		8	101	73	1000 to 1500	50
		9	101	73	1000 to 1500	50
		A	102	74	1000 to 1500	30
Miscellaneous	Access to a school, a work shop	B	99	70	554	20
		C	102	74	3000	100
Evacuation	Fire	D	98	69	440 to 554	20
Intrusion	Inside alarm	E	106	81	3200 / 3700	130
	Outside alarm	F	104	77	1400 / 1600	50

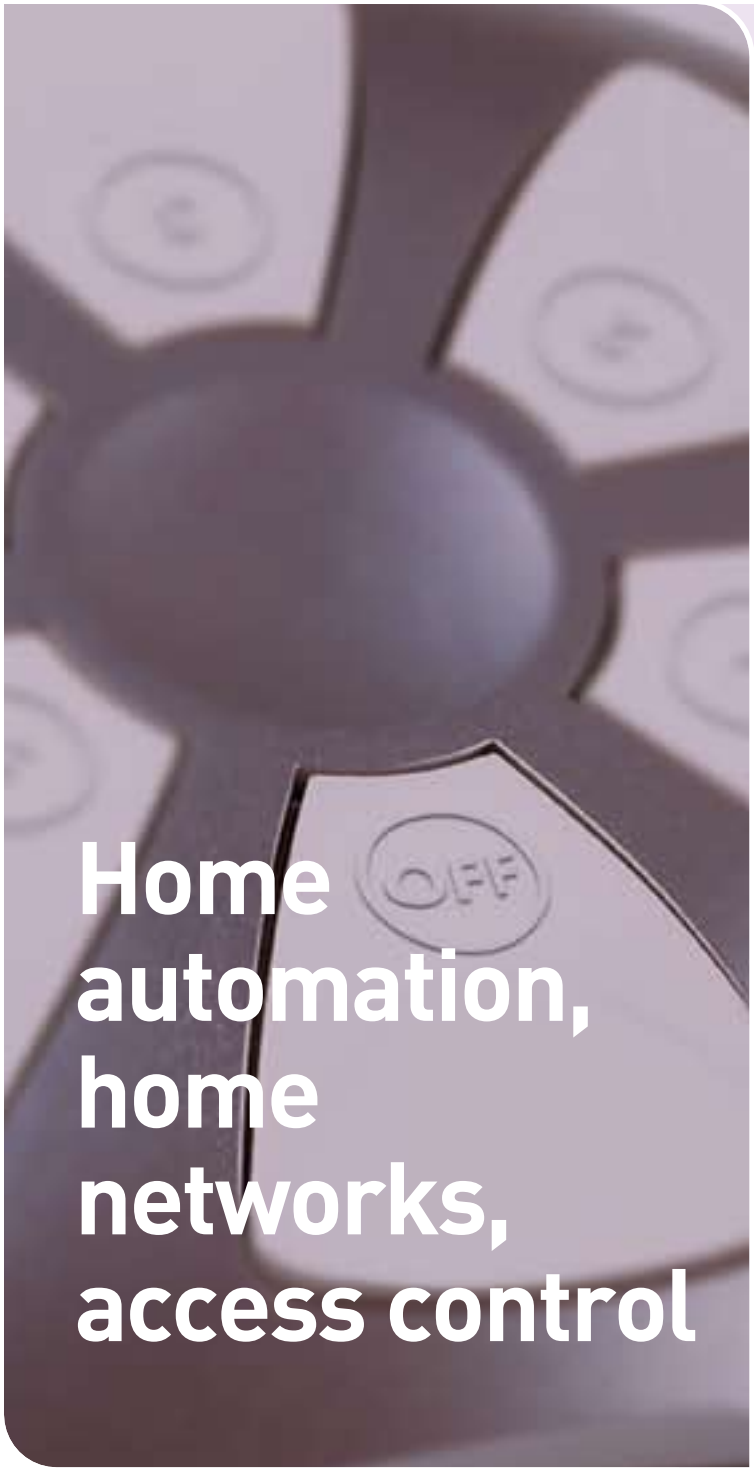

Home automation, home networks, access control

Radio/ZigBee® technology Arteor™
In One by Legrand

NEW
P. 414
Presentation of Radio/Zigbee® technology

BUS/SCS technology Arteor™
In One by Legrand

NEW
P. 420
Presentation of BUS/SCS technology

NEW
P. 427
Switches, dimmers max. loads (selection chart)

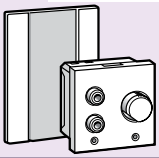

NEW
P. 433
Sound diffusion

PLC technology Céliane™
In One by Legrand

P. 440
Presentation of PLC technology

Home networks
In One by Legrand

P. 448
Presentation of Home networks

Access control
In One by Legrand



P. 458
Céliane video and audio door entry systems

ZigBee® Certified product - Manufacturer Specific Profile

NEW IN 2009



Arteor™
Radio/ZigBee® technology
In One by Legrand
(p. 414 to 419)



Arteor™
BUS/SCS technology
In One by Legrand
(p. 420 to 439)

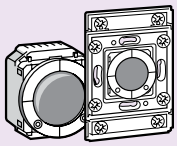
NEW
P. 416
Lighting control and automation mechanisms

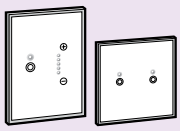
NEW
P. 417
Touch plates

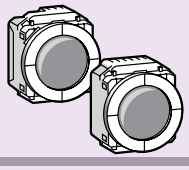
NEW
P. 417
Other functions


NEW
P. 418
Switches, dimmers max. loads (selection chart)

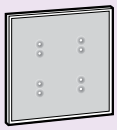
NEW
P. 422
Lighting control and automation mechanisms

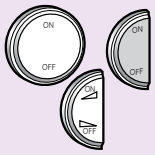

NEW
P. 423
Key covers

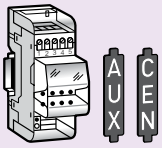

NEW
P. 424
Actuators, BUS power supplies accessories


NEW
P. 426
Lighting control installation

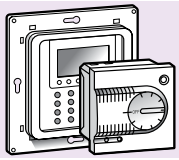
NEW
P. 428
Temperature control


NEW
P. 429
Temperature control installation

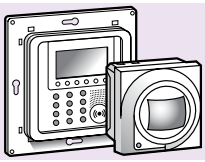
NEW
P. 430
Intruder alarm


NEW
P. 432
Intruder alarm installation


NEW
P. 435
Sound diffusion installation

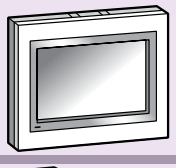
NEW
P. 436
House management system

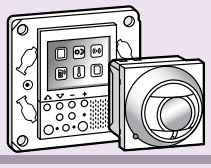
NEW
P. 437
Door entry systems


NEW
P. 439
Door entry systems installation

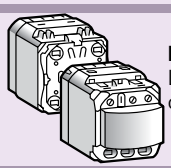
P. 442
Lighting control

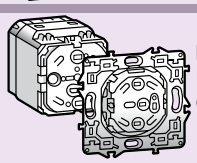
P. 444
Roller blinds control

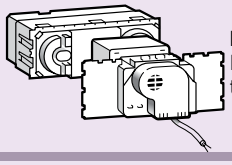
P. 445
Heating control, technical detectors


P. 447
IP Axiophone, Media Server characteristics

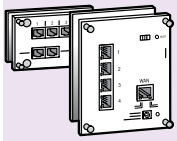
NEW
P. 450
Home networks structured wiring


P. 452
Structured wiring technical characteristics

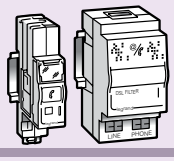
NEW
P. 454
Home networks multimedia modular system


P. 455
Multimedia modular system technical characteristics

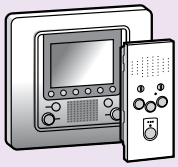
P. 462
Galea Life video and audio door entry systems


P. 466
Audio and video door entry systems 1>128 apartments

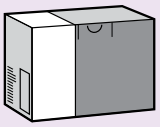
P. 471
Kits for video and audio door entry systems 1>12 apartments

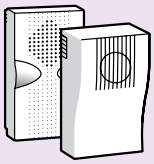
P. 480
Electronic chimes



Home networks
structured wiring
(p. 450 to 452)



Home networks
multimedia modular system
(p. 454 to 455)

Customized solutions for comfort, safety and communication

With the In One by Legrand in your home, controlling and programming the electricity and the multimedia systems become a real pleasure.



In One by Legrand SOLUTIONS

Today Legrand can provide even more comfort, freedom of communication and safety. With the In One by Legrand system, controlling and programming all the electricity and multimedia systems in your home becomes a real pleasure:

- Dim the lights, control the motorised roller blinds and adjust the heating with a single action
- Communicate as you choose throughout the house - whatever the medium, the sockets recognise the type of device and the panel sends the right signal
- Whether you want to monitor your house or welcome friends for a dinner party, the In One by Legrand solutions can monitor people's safety and ensure peace of mind for the whole family



Mobile scenarios controller

COMFORT FUNCTIONS NEW



ARTEOR™ SCENARIO CONTROLLERS
(See p. 436)
Centralisation and control of all the functions at a single point in the house



ARTEOR™ LIGHTING CONTROL
(See p. 422-425)
Control the lighting for even greater comfort



ARTEOR™ TEMPERATURE CONTROLLER
(See p. 428)
Manage your energy consumption by choosing exactly the temperature you want



ARTEOR™ ROLLER BLIND CONTROLS
(See p. 422-425)
Create scenarios adapted to the lifestyles of the users



SAFETY FUNCTIONS NEW



ARTEOR™ ACCESS CONTROL
(See p. 437-438)
Check visitors' identity in total safety with the audio and video door entry kits

COMMUNICATION FUNCTIONS NEW



ARTEOR™ SOUND DISTRIBUTION
(See p. 433-434)
Listen to your favourite music programme anywhere in the house

In One by Legrand FUNCTIONS IN OTHER RANGES



- **Céliane** (See p. 528-539)
- **Galea Life** (See p. 648-671)
- **Vela** (See p. 704-711)
- **Synergy** (See p. 590-591)
- **Mallia** (See p. 630-631)

OTHER LEGRAND SYSTEMS AND RANGES FOR YOUR PROJECTS

Lexic modular DIN-Rail equipment
See p. 142-143

Home networks
See p. 448-449 and 453

International standards wiring accessories
See p. 484-485

Weatherproof and vandal-proof wiring accessories systems
See p. 738-739