NH Bases





Product description

Eaton's Bussmann™ series NH Bases have been designed with thermoplastic bodies DIN-Rail and/or screw mounting (size 4 screw mounting only).
This range comes with accessories including phase barriers: IP20 finger safe protection kits (IEC only) and neutral links.
Microswitch also available for remote signaling of fuse link operation.

Standard features

- Complies with IEC 60269-1 and 2 fuse system A (NH Base), manufacturers type test certificates of compliance available.
- 3-pole integral NH00 Base available with reduced width
- Clip-in phase barriers, terminal shrouds and fuse covers available
- Vibration tested to IEC 60068-2-6 for marine use

Catalogue symbol

- 1-pole DIN-Rail and screw mounting: SD(size)-D
- 1-pole screw mounting only: SD(size)-S
- 3-pole DIN-Rail and screw mounting: TD(size)-D
- 3-pole Integral DIN-Rail and screw mounting: TD00-DxI (see catalogue numbers for details)

Technical data

- Rated voltage:
  - 690 V a.c. IEC
  - 1000 V a.c. UL for SD1-D only
- Rated current: 160 to 1600 A
- Rated for fuse links with breaking capacity of 120 kA

Standard/Approvals

- IEC 60269-1 and 2
- VDE 0636-1 and 2

Packaging

- 1-pole: 3
- 3-pole and SD4: 1

Technical data

Fuse base catalogue numbers		SD00-D TD00-D TD00-DI	SD1-D TD1-D	SD2-D TD2-D	SD3-D TD3-D	SD4-S	SD4-S1600
Base		Glass filled PBT					
Contacts		Silver plated copper					
Screw, nuts and washers		Zinc clear plated steel					
Derating temperature factors for maximum current	≤ 35°C	1	1	1	1	1	1
	40°C	0.95	0.95	0.95	0.95	0.95	0.95
	50°C	0.85	0.85	0.85	0.85	0.85	0.85
Maximum power acceptance		12W	32W	45W	60W	110W	145W
IP20 finger safe protection kits (IEC only)		✓	✓	✓	✓	×	×
Terminal screw		M8	M10	M10	M12	M16	M16
Maximum tightening torque terminal screw		10N•m	32N•m	32N•m	32N•m	56N•m	56N•m
Fixing	DIN-Rail	✓	✓	✓	✓	×	×
	Screw	✓	✓	✓	✓	✓	✓
With microswitch 16A/250V	Fuse operated signal	✓	✓	✓	✓	×	×
Operating temperature range		-20 to 70°C					
Storage temperature range		-40 to 80°C					

NH Bases

1-pole and 3-pole non integral NH Bases - Catalogue numbers

Compatible NH Fuse link body size	Poles	Current (Amps)	DIN-Rail and screw mounting	Screw mounting only	Pack quantity	Compatible fuse links
00	1-pole	160	SD00-D	SD00-S	3	400/500/690 V NH gG and aM fuse links
	3-pole	160	TD00-D	N/A	1	
1	1-pole	250	SD1-D	SD1-S	3	
	3-pole	250	TD1-D	N/A	1	
2	1-pole	400	SD2-D	SD2-S	3	
		400	SD2-DD*	N/A	3	
	3-pole	400	TD2-D	N/A	1	
		400	TD2-DD*	N/A	1	
3	1-pole	630	SD3-D*	SD3-S	3	
	3-pole	630	TD3-D*	N/A	1	
4	1-pole	1250	N/A	SD4-S	1	
		1600	N/A	SD4-S1600	1	

*Double fuse contact clips

1-pole and 3-pole non integral NH base - Catalogue numbers structure

Poles	Compatible NH Fuse links body size	Mounting type
SD = Single pole	**00** = Compatible for NH fuse links body size 00	**D** = DIN-Rail and screw mounting
TD = Triple pole	**1** = Compatible for NH fuse links body size 1	**DD** = Double fuse contact clips
	2 = Compatible for NH fuse links body size 2	**S** = Screw mounting only
	3 = Compatible for NH fuse links body size 3	**S1600** = Screw mounting only, 1600 A
	4 = Compatible for NH fuse links body size 4 (Single pole only)	

For example catalogue number **SD2-D** represents a 1-pole **SD** NH Fuse base, suitable for a NH fuse link body size **2** fuse link, **S** screw mounting only

3-pole Integral NH Base parts - Catalogue numbers

Catalogue numbers	Line side mounting	Load side mounting	Compatible NH Fuse link body size	Poles	Current (Amps)	Pack quantity	Compatible NH fuse links
TD00-DI	Screw mounting holes	Screw mounting holes	00	3-pole	160	1	400/500/690 V NH gG and aM fuse links
TD00-DCI	Clinch nut	Clinch nut					
TD00-DPI	Pressure plate	Pressure plate					
TD00-DBI	70 mm fixed box lug	70 mm fixed box lug					
TD00-DCPI	Clinch nut	Pressure plate					
TD00-DCBI	Clinch nut	70 mm fixed box lug					
TD00-DPBI	Pressure plate	70 mm fixed box lug					

3-pole Integral NH Base parts - Catalogue numbers structure

Poles	Compatible NH Fuse links size	Line side mounting/ Load side mounting	Integral NH Base
TD = Triple pole	**00** = Compatible for NH fuse links body size 00	**I** = Integral base screw mounting/screw mounting	
		C = Clinch nut/clinch nut	**I** = Integral NH Base
		P = Pressure plate/pressure plate	
		B = 70 mm fixed box lug/70 mm fixed box lug	
		CP = Clinch nut/pressure plate	
		CB = Clinch nut/70 mm fixed box lug	
		PB = Pressure plate/70 mm fixed box lug	

For example catalogue number **TD00-CPI** represents a 3-pole **TD** NH Fuse base, suitable for a NH fuse link body size **00**, with **C** clinch nut load side mounting and **P** pressure plate load side mounting, **I** integral base

Solid links catalogue numbers

NH fuse link body size	Current (Amps)	Catalogue numbers	Pack quantity
NH00	160	SDL-00	3
NH1	250	SDL-1	3
NH2	400	SDL-2	3
NH3	630	SDL-3	3



Solid link

Accessories

Fuse extraction handle

NH fuse link body size	Current (Amps)	Catalogue numbers	Pack quantity
NH00-3	160 - 630	FEH	1



Fuse extraction handle

Shroud kits

Fuse base range	NH fuse link body size	Current (Amps)	Catalogue numbers	Description
SD00	NH00	160	SD00-SK	Kit includes 2 shrouds and 1 fuse cover
SD1	NH1	250	SD12-SK	
SD2	NH2	400	SD12-SK	
SD3	NH3	630	SD3-SK	



Shroud kit

Phase barrier kit

NH fuse link body size	Current (Amps)	Catalogue numbers	Pack quantity	Description
NH00	160	SD00-PB	1	2-Phase barriers
NH1	250	SD12-PB	1	2-Phase barriers and 2 ganging links
NH2	400	SD12-PB	1	
NH3	630	SD3-PB	1	



Phase barrier



Ganging link

Accessories

IP Protection Kits



NH fuse link body size	Current (Amps)	Catalogue numbers	Fuse cover	Shroud	Phase barrier	Ganging link	Integral kit	Description
NH00	160	TD00-IP20	3	6	2			Triple pole protection kit for TD00-D with shrouds, fuse covers and phase barriers
		TD00-IP20I					1	Integral triple pole protection kit for TD00-DI with molded shrouds and phase barriers
		TD00-IP20IC	3				1	Integral triple pole protection kit for TD00-DI with fuse covers and molded shrouds and phase barriers
NH1	250	TD1-IP20	3	6	2	2		Triple pole protection kit with terminal shrouds, fuse cover phase barriers and ganging links
NH2	400	TD2-IP20						
NH3	630	TD3-IP20						



TD00-IP20



TD00-IP20I



TD00-IP20IC



TD(size 1 to 3)-IP20

Microswitch

Catalogue numbers	Pack quantity	Ratings
BVL50	1	5 A 250 V a.c.
170H0236	12	2 A 250 V a.c.
170H0238	12	2 A 250 V a.c.



BVL50



170H0236

Microswitch suitable for the following NH fuse links:

- 400 Volts gG/gL
- 500 Volts gG/gL and aM
- 690 Volts gG/gL and aM.

Note: Microswitches fit onto the fuse gripping lugs and are applicable to all Bussmann series NH fuses.

Dimensions (mm) 1-pole, size 00

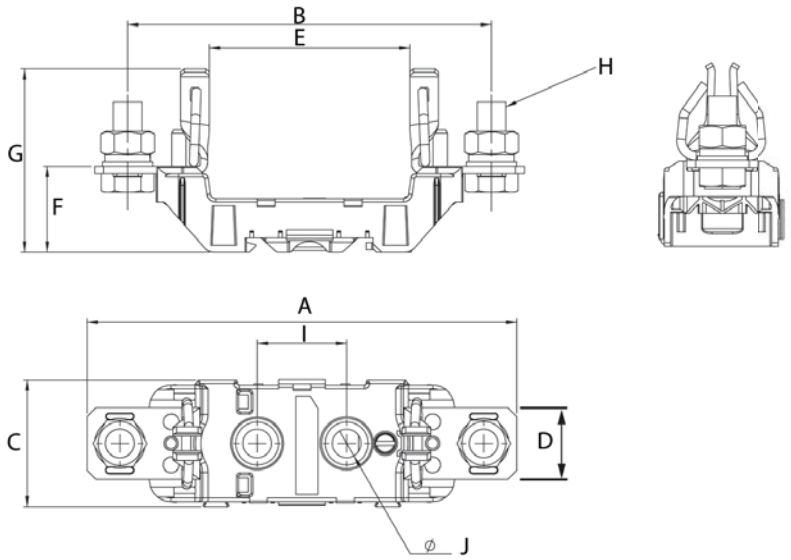

NH fuse link body size	Pole	A	B	C	D	E	F	G	H	I	J
NH00	1-pole	120	102	35.5	20	56	24	51	M8x20	25	8

Dimensions (mm) 1-pole, sizes 1, 2 and 3

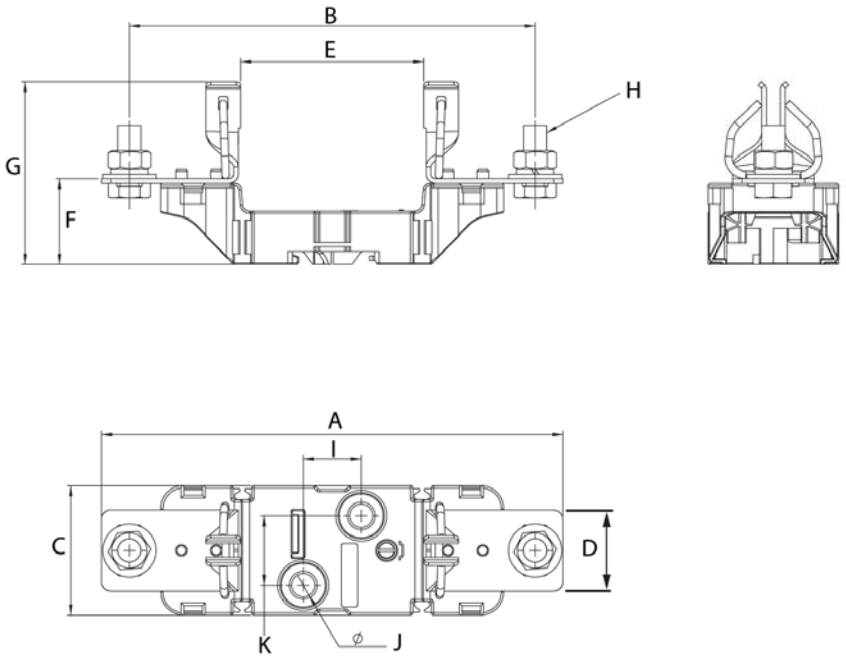

Fuse body size	Poles/Type	A	B	C	D	E	F	G	H	I	J	K
NH1	1-pole	199	175	56	35	79	37	78	M10x25	25	10	30
NH2	1 pole	224	199	56	35	79	37.5	86	M10x25	25	10	30
	1-pole double clip	223	199	56	35	82	37	79	M10x25	25	10	30
NH3	1-pole	239	209	56	36	82	37.5	88	M12x30	25	10	30

Dimensions (mm) 1-pole, size 4

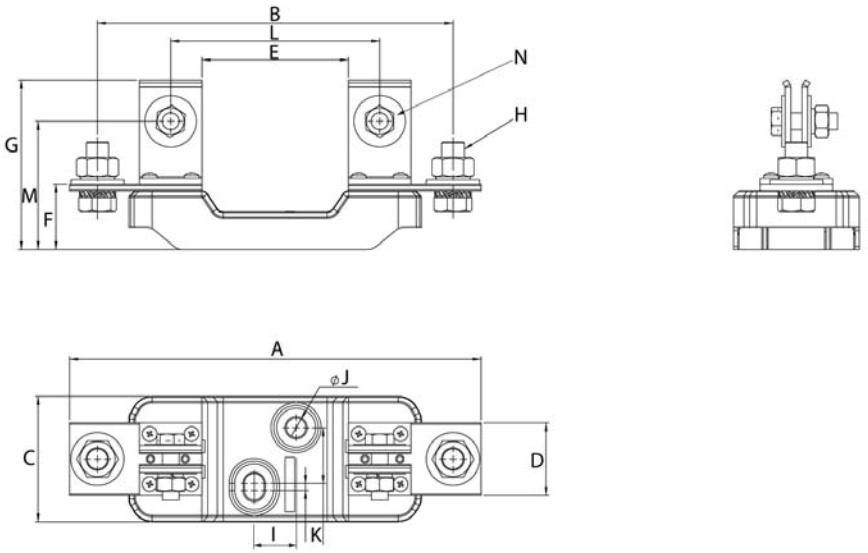

NH fuse link body size	Poles/Type	A	B	C	D	E	F	G	H	I	J	K	L	M	N
NH4	1-pole 1250A	295	255	90	52	105	47	122	M16x40	30	14	40	150	92	M12x40
	1-pole 1600A	295	255	90	60	105	50	125	M16x40	30	14	40	150	92	M12x40

Dimensions (mm) 3-pole, size 00

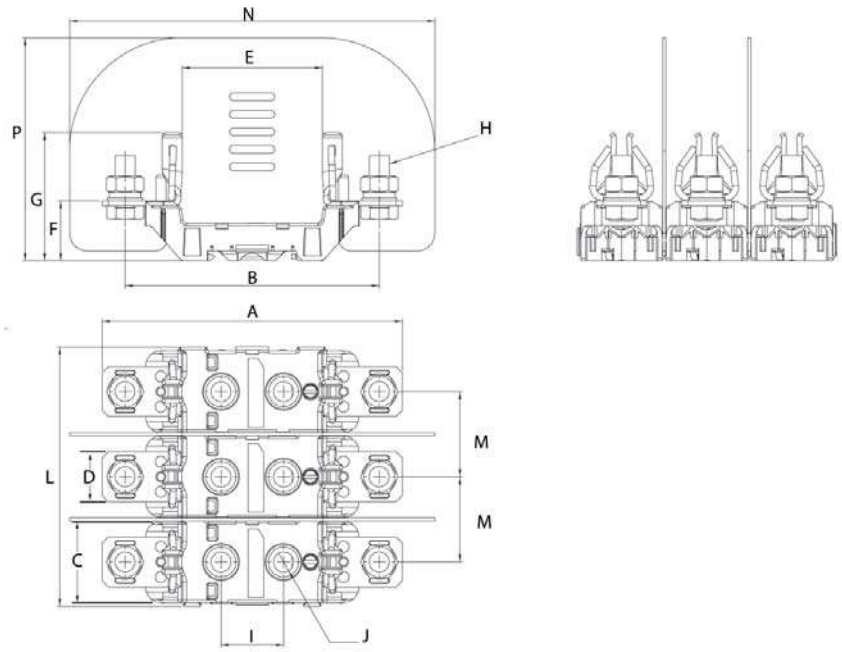

NH fuse link body size	Poles/Type	A	B	C	D	E	F	G	H	I	J	K	L	M	N	P
NH00	3-pole	120	102	35.5	20	56	24	51	M8x20	25	8	-	103.5	34	146	89

Dimensions (mm) 3-pole, sizes 1, 2 and 3

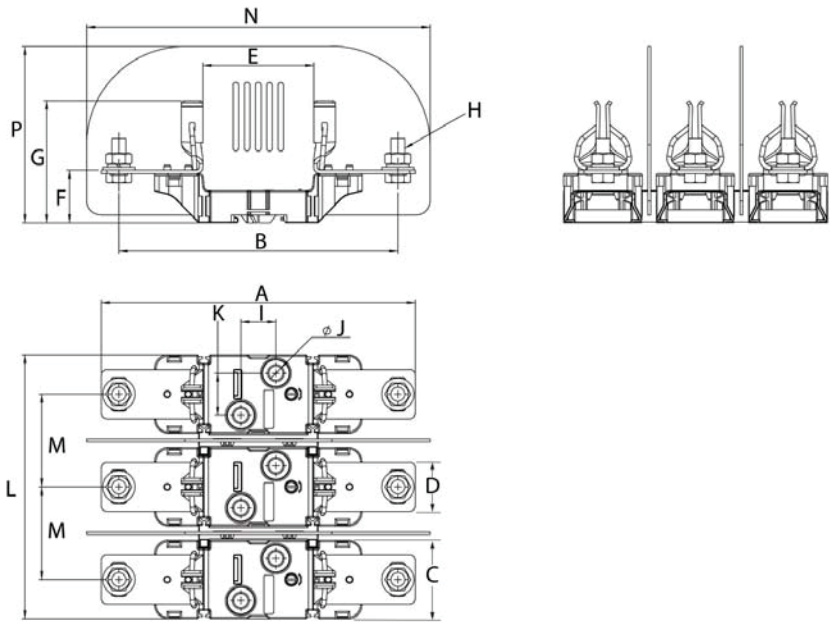

NH Fuse link body size	Poles/Type	A	B	C	D	E	F	G	H	I	J	K	L	M	N	P
NH1	3-pole	199	175	56	35	79	37	78	M10x25	25	10	30	188	66	245	125.5
NH2	3-pole	224	199	56	35	79	37.5	86	M10x25	25	10	30	188	66	245	125.5
	3-pole double clip	223	199	56	35	82	37	79	M10x25	25	10	30	188	66	245	125.5
NH3	3-pole	239	209	56	36	82	37.5	88	M12x30	25	10	30	221	82.5	260	137.5

Dimensions (mm) <u>integral</u> 3-pole, size 00

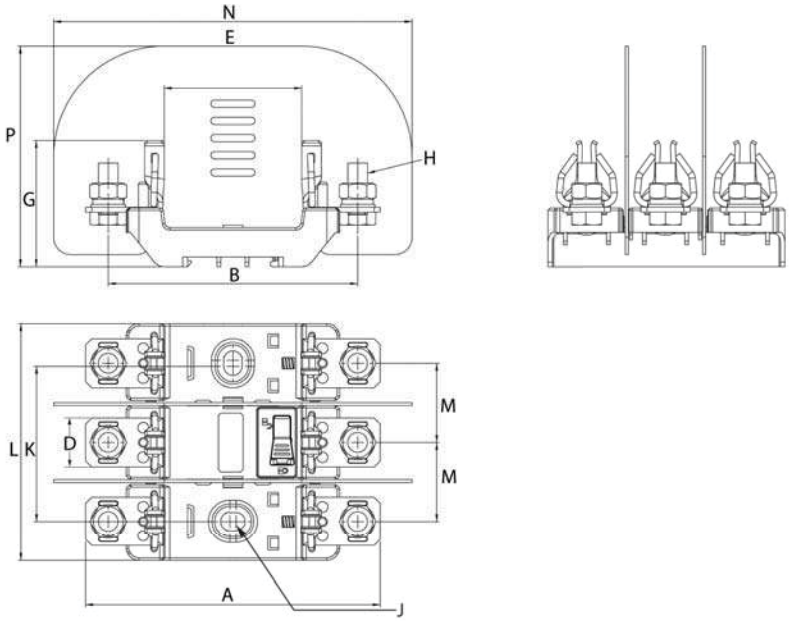

NH fuse link body size	Poles/Type	A	B	C	D	E	F	G	H	I	J	K	L	M	N	P
NH00	3-pole Integral	120	102	-	20	56	24	51	M8x20	-	7.5x10	63.5	97	32.3	146	90

Fixings dimensions (mm) for integral 3-pole NH Base

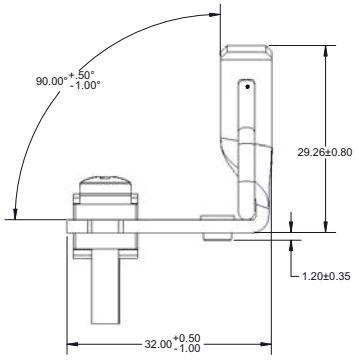

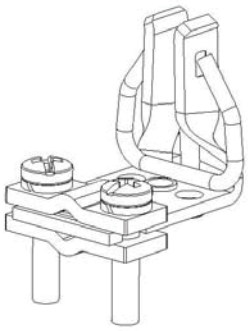

Pressure plate

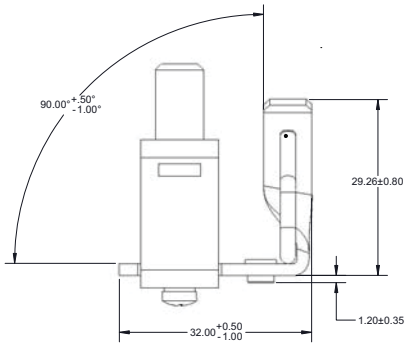

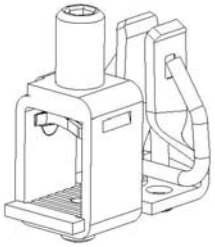

Box lug

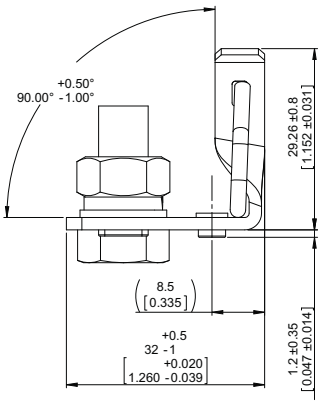

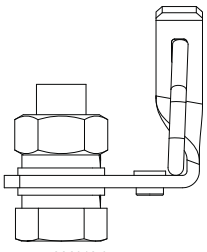

Clinch nut

Changes to the products, to the information contained in this document, and to prices are reserved; so are errors and omissions. Only order confirmations and technical documentation by Eaton is binding. Photos and pictures also do not warrant a specific layout or functionality. Their use in whatever form is subject to prior approval by Eaton. The same applies to Trademarks (especially Eaton, Moeller, and Cutler-Hammer). The Terms and Conditions of Eaton apply, as referenced on Eaton Internet pages and Eaton order confirmations.

Eaton
EMEA Headquarters
Route de la Longeraie 7
1110 Morges, Switzerland

Eaton Electrical Products Limited
Melton Road
Burton-on-the-Wolds
Leicestershire, LE12 5TH
United Kingdom

© 2017 Eaton
All Rights Reserved
PDF Only
Publication No. 10163
June 2018

Powering Business Worldwide

Eaton is a registered trademark.

All other trademarks are property of their respective owners.