87045 LIMOGES Cedex
Telephone: (33) 5 55 06 87 87 - Fax: (33) 5 55 06 88 88

16/32/63A - IP44 plugs, mobile sockets, socket inlets and appliance inlets

Cat. No(s):

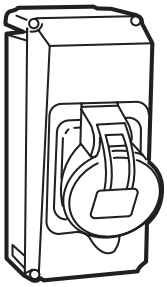
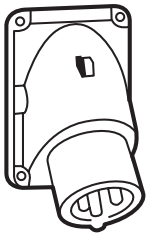
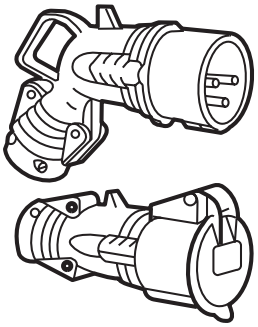

CONTENTS Page

1. General data. 1-2
2. Range. 2-10
3. Dimensions. 11-15
4. Technical data 15-16
5. Connection 16
6. Wiring chart 17
7. Standards and decrees 17
8. Accessories 17

1. GENERAL DATA

Three materials: metal, plastic, rubber
IP 44 from 16 to 63A
Integrated cable gland on the entire range
Captive external screws, stainless steel
Direct transfer range which can be used to replace old Martin Lunel stock.
Nickel-plated brass pins.

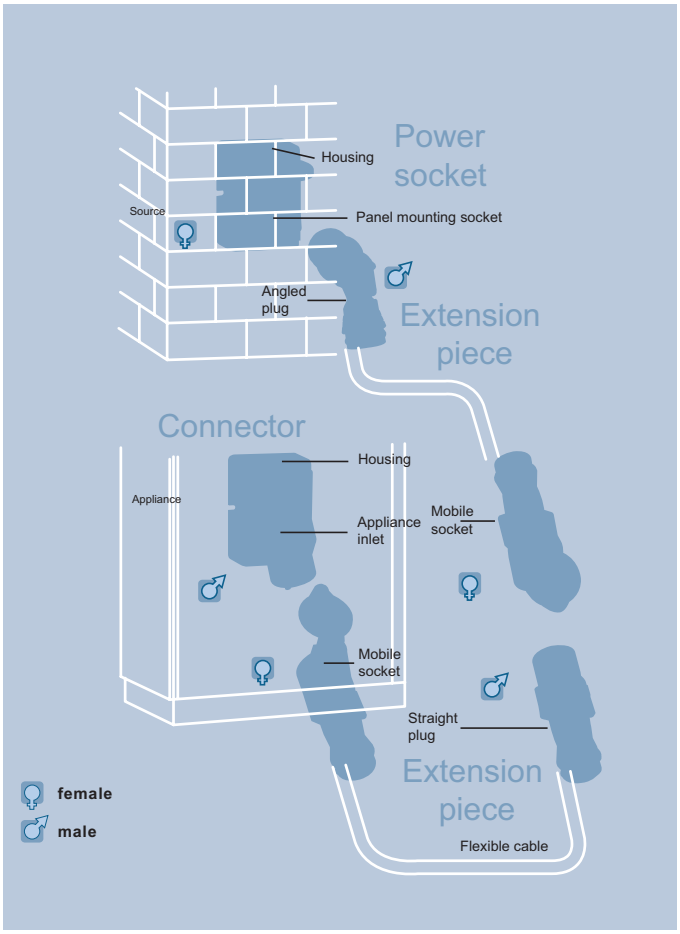

Plugs and mobile sockets

- Plastic for ELV
- Metal, plastic, rubber for 16/32 IP44
- Plastic, rubber for 63 IP44
- Plastic for 63A and 125A IP66/67
- Accepts different cable Ø thanks to the peelable ring on the cable gland.



1. GENERAL DATA (continued)

Socket inlet and housing (panel and surface mounting)

The panel mounting socket may be installed directly on a unit or cabinet wall after cutting or drilling.
it is supplied with a flat seal which is sized to ensure it provides a seal with the housing to which it is fixed.
The surface mounting sockets are made by assembling the panel mounting socket or appliance inlet on the housing (simple or through supply). Some 63A and 125A surface mounting sockets are supplied assembled.

Housings for surface mounting installation
Most of the housings in the Hypra range are reversible and enable cables to be fed in either from the top or bottom.

To facilitate the installation of these housings, the mounting dimensions are engraved on the rear of the housing.

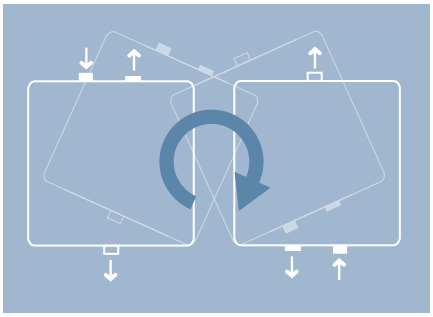

PLEASE NOTE:

The metal through housings have three terminals for protective conductors:
- the first is intended to receive the protective conductor coming from the supply
- the second is intended for reconnecting the protective conductor for another application
- the third is intended for connecting the socket inlet (connector provided).

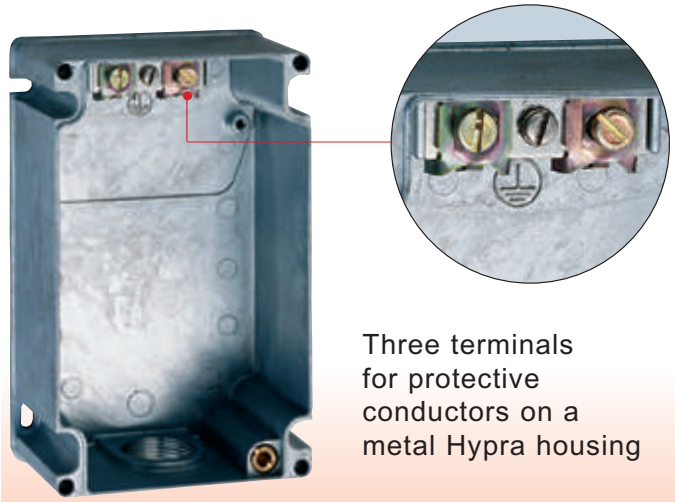

Three terminals for protective conductors on a metal Hypra housing

2. RANGE

16/32/63A - metal and plastic inclined panel mounting sockets

			Metal	Plastic
20/25V~ 50/60Hz	16A	2P		0 524 01
		3P		0 524 02
	32A	2P		0 525 01
40/50V~ 50/60Hz	16A	2P		0 524 03
		3P		0 524 04
20/50V=	16A	2P		0 524 05
50/500V 100/130Hz	16A	3P+E		0 523 30
50/500V 300/500Hz				0 523 40
100/130V~ 50/60Hz	16A	2P+E	0 519 30	0 519 20
200/250V~ 50/60Hz	16A	2P+E	0 520 32	0 520 22
		3P+E	0 520 33	0 520 23
		3P+N+E	0 520 34	0 520 24
	32A	2P+E	0 527 32	
		3P+E	0 527 33	
	63A	2P+E		0 536 22
		3P+E		0 536 23
380/415V~ 50/60Hz	16A	2P+E	0 522 32	0 522 22
		3P+E	0 522 33	0 522 23
		3P+N+E	0 522 34	0 522 24
	32A	2P+E	0 529 32	
		3P+E	0 529 33	
		3P+N+E	0 529 34	
	63A	3P+E	0 538 33	0 538 23
		3P+N+E	0 538 34	0 538 24
440/460V 60Hz - earth at 11h	16A	3P+E		0 523 10
		3P+N+E		6 581 32
480/500V~ 50/60Hz	16A	3P+E		0 523 20

NB: Use of pilot cable in 63A

2. RANGE (continued)

16/32A plastic panel mounting sockets with single fixing centres

50/500V 100/130Hz	32A	3P+E	0 523 70
50/500V 300/500Hz			0 523 80
100/130V~ 50/60Hz	16A	2P+E	0519 19
	32A	2P+E	0 519 21
200/250V~ 50/60Hz	16A	2P+E	0 520 18
		3P+E	0 520 19
		3P+N+E	0 520 20
	32A	2P+E	0 527 18
		3P+E	0 527 19
		3P+N+E	0 527 20
380/415V~ 50/60Hz	16A	2P+E	0 522 18
		3P+E	0 522 19
		3P+N+E	0 522 20
	32A	2P+E	0 529 18
		3P+E	0 529 19
		3P+N+E	0 529 20
440/460V 60Hz - earth at 11h	32A	3P+E	0 523 50
		3P+N+E	6 581 37
480/500V~ 50/60Hz	16A	3P+E	0 523 19
	32A	3P+E	0 523 59

16/32A simple plastic surface mounting sockets

			Socket	Simple housing
20/25V~ 50/60Hz	16A	2P	0 524 01	0 524 19
		3P	0 524 02	0 524 19
	32A	2P	0 525 01	0 524 19
40/50V~ 50/60Hz	16A	2P	0 524 03	0 524 19
		3P	0 524 04	0 524 19
20/50V=	16A	2P	0 524 05	0 524 19
50/500V 100/130Hz	16A	3P+E	0 523 30	0 522 29
	32A		0 523 70	0 529 40
50/500V 300/500Hz	16A	3P+E	0 523 40	0 522 29
	32A		0 523 80	0 529 40
100/130V~ 50/60Hz	16A	2P+E	0 519 20	0 520 29
	32A	2P+E	0 519 21	0 529 40
200/250V~ 50/60Hz	16A	2P+E	0 520 22	0 520 29
		3P+E	0 520 23	0 522 29
		3P+N+E	0 520 24	0 522 29
	32A	2P+E	0 527 18	0 529 40
		3P+E	0 527 19	0 529 40
		3P+N+E	0 527 20	0 529 40
380/415V~ 50/60Hz	16A	2P+E	0 522 22	0 520 29
		3P+E	0 522 23	0 522 29
		3P+N+E	0 522 24	0 522 29
	32A	2P+E	0 529 18	0 529 40
		3P+E	0 529 19	0 529 40
		3P+N+E	0 529 20	0 529 40

2. RANGE (continued)

16/32A simple plastic surface mounting sockets (continued)

			Socket	Simple housing
440/460V 60Hz - earth at 11h	16A	3P+E	0 523 10	0 522 29
		3P+N+E	6 581 32	0 522 29
	32A	3P+E	0 523 50	0 529 40
		3P+N+E	6 581 37	0 529 40
480/500V~ 50/60Hz	16A	3P+E	0 523 20	0 522 29
	32A	3P+E	0 523 59	0 529 40

16/32A simple metal surface mounting sockets

			Socket	Simple housing
200/250V~ 50/60Hz	16A	2P+E	0 519 30	0 520 39
		3P+E	0 520 32	0 520 39
		3P+N+E	0 520 33	0 522 39
	32A	2P+E	0 520 34	0 522 39
		3P+E	0 527 32	0 529 39
380/415V~ 50/60Hz	16A	2P+E	0 527 33	0 529 39
		3P+E	0 522 32	0 520 39
		3P+N+E	0 522 33	0 522 39
	32A	2P+E	0 522 34	0 522 39
		3P+E	0 529 32	0 529 39
		3P+N+E	0 529 33	0 529 39
440/460V 60Hz - earth at 11h	16A	3P+E	0 529 34	0 529 39

63A simple metal and plastic surface mounting sockets

			Metal	Plastic
200/250V~ 50/60Hz	63A	2P+E		0 537 22
380/415V~ 50/60Hz	63A	3P+E	0 537 33	0 537 23
		3P+N+E	0 537 34	0 537 24

NB: Use of pilot cable in 63A

2. RANGE (continued)

16/32/63A through plastic surface mounting sockets

			Socket	Through housing
50/500V 100/130Hz	16A	3P+E	0 523 30	0 522 89
	32A		0 523 70	0 529 90
50/500V 300/500Hz	16A	3P+E	0 523 40	0 522 89
	32A		0 523 80	0 529 90
100/130V~ 50/60Hz	16A	2P+E	0 519 20	0 520 89
	32A		0 519 21	0 529 90
200/250V~ 50/60Hz	16A	2P+E	0 520 22	0 520 89
		3P+E	0 520 23	0 522 89
		3P+N+E	0 520 24	0 522 89
	32A	2P+E	0 527 18	0 529 90
		3P+E	0 527 19	0 529 90
		3P+N+E	0 527 20	0 529 90
	63A	2P+E	0 53622	0 538 89
		3P+E	0 536 23	0 538 89
380/415V~ 50/60Hz	16A	2P+E	0 522 22	0 520 89
		3P+E	0 522 23	0 522 89
		3P+N+E	0 522 24	0 522 89
	32A	2P+E	0 529 18	0 529 90
		3P+E	0 529 19	0 529 90
		3P+N+E	0 529 20	0 529 90
	63A	3P+E	0 538 23	0 538 89
		3P+N+E	0 538 24	0 538 89
440/460V 60Hz - earth at 11h	16A	3P+E	0 523 10	0 522 89
		3P+N+E	6 581 32	0 522 89
	32A	3P+E	0 523 50	0 529 90
		3P+N+E	6 581 37	0 529 90
480/500V~ 50/60Hz	16A	3P+E	0 523 20	0 522 89
	32A		0 523 59	0 529 90

NB: Use of pilot cable in 63A

16/32/63A through metal surface mounting sockets

			Socket	Through housing
100/130V~ 50/60Hz	16A	2P+E	0 519 30	0 520 99
	32A		0 51932	0 529 99
200/250V~ 50/60Hz	16A	2P+E	0 520 32	0 520 99
		3P+E	0 520 33	0 522 99
		3P+N+E	0 520 34	0 522 99
	32A	2P+E	0 527 32	0 529 99
		3P+E	0 527 33	0 529 99
		3P+N+E	0 527 34	0 529 99
380/415V~ 50/60Hz	16A	2P+E	0 522 32	0 520 99
		3P+E	0 522 33	0 522 99
		3P+N+E	0 522 34	0 522 99
	32A	2P+E	0 529 32	0 529 99
		3P+E	0 529 33	0 529 99
		3P+N+E	0 529 34	0 529 99
	63A	3P+E	0 538 33	0 538 99
		3P+N+E	0 538 34	0 538 99

NB: Use of pilot cable in 63A

2. RANGE (continued)

16/32/63A straight metal, plastic, rubber plugs

			Metal	Plastic	Rubber
20/25V~ 50/60Hz	16A	2P		0 524 21	0 524 41
		3P		0 524 22	0 524 42
	32A	2P		0 525 21	0 525 41
40/50V~ 50/60Hz	16A	2P		0 524 23	0 524 43
		3P		0 524 24	0 524 44
20/50V=	16A	2P		0 525 25	0 525 43
50/500V 100/130Hz	16A	3P+E		0 523 31	
	32A			0 523 71	
50/500V 300/500Hz	16A	3P+E		0 523 41	
	32A			0 523 81	
100/130V~ 50/60Hz	16A	2P+E		0 519 40	
	32A	2P+E		0 519 42	
200/250V~ 50/60Hz	16A	2P+E	0 521 42	0 520 42	0 520 52
		3P+E		0 520 43	0 520 53
		3P+N+E		0 520 44	0 520 54
	32A	2P+E		0 527 42	0 527 52
		3P+E		0 527 43	0 527 53
		3P+N+E		0 527 44	0 527 54
	63A	2P+E		0 536 42	0 536 52
		3P+E		0 536 43	
		3P+N+E		0 536 44	
380/415V~ 50/60Hz	16A	2P+E		0 522 42	0 522 52
		3P+E	0 521 43	0 522 43	0 522 53
		3P+N+E	0 521 44	0 522 44	0 522 54
	32A	2P+E		0 529 42	0 529 52
		3P+E	0 528 43	0 529 43	0 529 53
		3P+N+E	0 528 44	0 529 44	0 529 54
	63A	3P+E		0 538 43	0 538 53
		3P+N+E		0 538 44	0 538 54
440/460V 60Hz - earth at 11h	16A	3P+E		0 523 11	
	32A	3P+E		0 523 51	
480/500V~ 50/60Hz	16A	3P+E		0 523 21	
	32A	3P+E		0 523 61	

NB: Use of pilot cable in 63A

2. RANGE (continued)

16/32/63A angled metal, plastic, rubber plugs

			Metal	Plastic	Rubber
20/25V~ 50/60Hz	16A	2P		0 524 41	
		3P		0 524 42	
	32A	2P		0 525 41	
40/50V~ 50/60Hz	16A	2P		0 524 43	
		3P		0 524 44	
20/50V=	16A	2P		0 524 45	
200/250V~ 50/60Hz	16A	2P+E	0 520 72	0 520 62	0 521 52
		3P+E		0 520 63	
		3P+N+E		0 520 64	
	32A	2P+E	0 527 72	0 527 62	
		3P+E		0 527 63	
		3P+N+E		0 527 64	
	63A	2P+E	0 536 72		
		3P+E			
		3P+N+E			
380/415V~ 50/60Hz	16A	2P+E		0 522 62	
		3P+E	0 522 73	0 522 63	0 521 53
		3P+N+E	0 522 74	0 522 64	0 521 54
	32A	2P+E		0 529 62	
		3P+E	0 529 73	0 529 63	0 528 53
		3P+N+E	0 529 74	0 529 64	0 528 54
	63A	3P+E	0 538 73		0 538 63
		3P+N+E	0 538 74		0 538 64

NB: Use of pilot cable in 63A

2. RANGE (continued)

16/32/63A plastic, rubber mobile sockets

			Plastic	Rubber
20/25V~ 50/60Hz	16A	2P	0 524 61	0 524 81
		3P	0 524 62	0 524 82
	32A	2P	0 525 61	0 525 81
40/50V~ 50/60Hz	16A	2P		0 524 83
		3P		0 524 84
20/50V=	16A	2P		0 524 85
50/500V 100/130Hz	16A	3P+E	0 523 32	
	32A		0 523 72	
50/500V 300/500Hz	16A	3P+E	0 523 42	
100/130V~ 50/60Hz	16A	2P+E	0 519 80	
	32A	2P+E	0 519 82	
200/250V~ 50/60Hz	16A	2P+E	0 520 82	0 520 92
		3P+E	0 520 83	0 520 93
		3P+N+E	0 520 84	0 520 94
	32A	2P+E	0 527 82	0 527 92
		3P+E	0 527 83	0 527 93
		3P+N+E	0 527 84	0 527 94
	63A	2P+E	0 536 82	0 536 92
		3P+E	0 536 83	
		3P+N+E	0 536 84	
380/415V~ 50/60Hz	16A	2P+E	0 522 82	0 522 92
		3P+E	0 522 83	0 522 93
		3P+N+E	0 522 84	0 522 94
	32A	2P+E	0 529 82	0 529 92
		3P+E	0 529 83	0 529 93
		3P+N+E	0 529 84	0 529 94
	63A	3P+E	0 538 83	0 538 93
		3P+N+E	0 538 84	0 538 94
440/460V 60Hz - earth at 11h	16A	3P+E	0 523 12	
	32A	3P+E	0 523 52	
480/500V~ 50/60Hz	16A	3P+E	0 523 22	
	32A	3P+E	0 523 62	

NB: Use of pilot cable in 63A

2. RANGE *(continued)*

16/32/63A metal and plastic panel mounting appliance inlets

			Metal	Plastic
100/130V~ 50/60Hz	16A	2P+E		0 519 70
	32A	2P+E		
200/250V~ 50/60Hz	16A	2P+E	0 521 62	0 521 72
		3P+E		0 520 73
		3P+N+E		0 520 74
	32A	2P+E	0 528 62	0 528 72
		3P+E		0 527 73
		3P+N+E		0 527 74
	63A	2P+E		0 537 72
		3P+E		
		3P+N+E		
380/415V~ 50/60Hz	16A	2P+E		0 522 72
		3P+E	0 521 63	0 521 73
		3P+N+E	0 521 64	0 521 74
	32A	2P+E		0 529 72
		3P+E	0 528 63	0 528 73
		3P+N+E	0 528 64	0 528 74
	63A	3P+E	0 537 63	0 537 73
		3P+N+E	0 537 64	0 537 74

NB: Use of pilot cable in 63A

16/32/63A metal surface mounting appliance inlets

			Metal	Plastic
200/250V~ 50/60Hz	16A	2P+E	0 521 62	0 520 69
	32A	2P+E	0 528 62	0 529 69
380/415V~ 50/60Hz	16A	3P+E	0 521 63	0 522 69
		3P+N+E	0 521 64	0 522 69
	32A	3P+E	0 528 63	0 529 69
		3P+N+E	0 528 64	0 529 69
	63A	3P+E	0 537 63	0 538 69
		3P+N+E	0 537 64	0 538 69

NB: Use of pilot cable in 63A

16/32/63A plastic surface mounting appliance inlets

			Appliance inlet	Housing
100/130V~ 50/60Hz	16A	2P+E	0 519 70	0 520 79
200/250V~ 50/60Hz	16A	2P+E	0 521 72	0 520 79
		3P+E	0 520 73	0 522 79
		3P+N+E	0 520 74	0 522 79
	32A	2P+E	0 528 72	0 529 79
		3P+E	0 527 73	0 529 79
		3P+N+E	0 527 74	0 529 79
	63A	2P+E	0 537 72	0 538 79
380/415V~ 50/60Hz	16A	2P+E	0 522 72	0 520 79
		3P+E	0 521 73	0 522 79
		3P+N+E	0 521 74	0 522 79
	32A	2P+E	0 529 72	0529 79
		3P+E	0 528 73	0529 79
		3P+N+E	0 528 74	0529 79
	63A	3P+E	0 537 73	0 538 79
		3P+N+E	0 537 74	0 538 79

2. RANGE *(continued)*

• Direct transfer panel mounting sockets

Panel mounting socket Plastic Hypra Direct Transfer



Panel mounting socket Metal Hypra Direct Transfer



IP 44, 16 or 32 A Hypra Direct Transfer panel mounting sockets are fitted on your old housings for Martin Lunel sockets or can replace an old Martin Lunel panel mounting socket



16 A panel mounting sockets

Metal	Plastic	
		To replace Martin Lunel 10 A
		200/250 V~
	521 79	2 P + E
		380/415 V~
	521 80	3 P + E
		To replace Martin Lunel 16 A
		200/250 V~
521 92	**521 82**	2 P + E
	521 81	3 P + E
		380/415 V~
521 93	**521 83**	3 P + E
521 94	**521 84**	3 P + N + E
521 98		**Spacer** for mounting 16 A replacement sockets on Martin Lunel pin combination switches ref. 54606/07 Supplied with 2 seals and screws

32 A panel mounting sockets

Metal	Plastic	
		To replace Martin Lunel 32 A
		200/250 V~
528 92	528 82	2 P + E
528 81		3 P + E
		380/415 V~
528 93	**528 83**	3 P + E
528 94	**528 84**	3 P+N+E
528 29		**Reconnection terminal block for replacement 32 A surface mounting sockets** Adapts to the base of the housing for Martin Lunel pin surface mounting sockets

16/32/63A - IP44 plugs, mobile sockets, socket inlets and appliance inlets

Cat. No(s):

3. DIMENSIONS

IP 44 16 and 63A LV - 16 and 32A VLV inclined panel mounting sockets

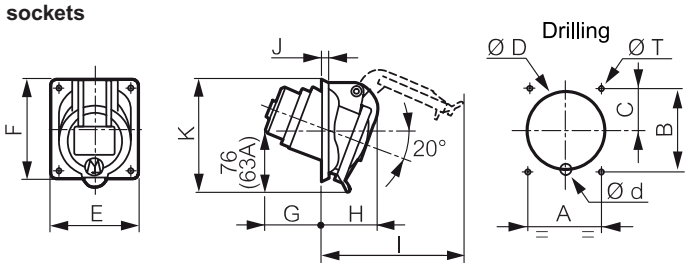

	Material	Weight (kg)	Drilling (mm)						Dimensions (mm)						
			A	B	C	øD	ød	øT	E	F	G	H	I	J	K
LV 16 A															
2P+E	Plastic	0.110	52	60	28	55	14.5	4.2	64	72	41	40	94	5.5	78.5
	Metal	0.340													
3P+E	Plastic	0.140	60	70	31	63.5	14.5	5.2	74	84	44	40	98	5.5	88
	Metal	0.405													
3P+N+E	Plastic	0.165	60	70	33	70.6	-	5.2	80	84	44	44	110	5.5	93
	Metal	0.450													
LV 32 A															
2P+E/ 3P+E	Metal	0.605	70	80	38	76.2	10	5.2	84	94	50	53	120	5.5	103
3P+N+E	Metal	0.660	70	80	38	76.2	10	5.2	84	94	52	56	124	5.5	107
LV 63 A															
2P+E	Plastic	0.600	77	85	-	92	-	6.5	106	106	98	70	160	6	129
3P+E	Plastic	0.640													
	Metal	1.000													
3P+N+E	Plastic	0.700													
	Metal	1.200													
VLV 16 A/32 A															
2P+E	Plastic	0.120	52	60	30	55	-	4.2	64	72	33	47	94	5.5	78.5

16/ 32A IP44 panel mounting sockets with 70x70 fixing centres

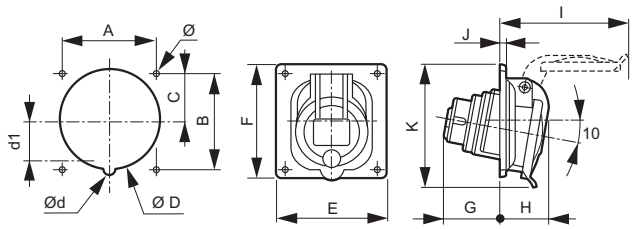

	Weight (kg)	A	B	C	Ø D	Ø d	d1	E	F	G	H	I	J	K	Ø
LV 16 A															
2 P + ⏚	0.110	70	70	35	76.2	/	/	84	84	37	36	89	4.5	88	4.2
3 P + ⏚	0.140	70	70	35	76.2	/	/	84	84	43	36	97	4.5	89	4.2
3 P + N + ⏚	0.165	70	70	35	76.2	/	/	84	84	43	37	106	4.5	91	4.2
LV 32 A															
2 P + ⏚	0.220	70	70	35	76.2	/	/	84	94	54	45	117	4.5	100	4.2
3 P + ⏚	0.220	70	70	35	76.2	/	/	84	94	54	45	117	4.5	100	4.2
3 P + N + ⏚	0.255	70	70	35	76.2	8	36	84	94	54	46	125	4.5	102	4.2

3. DIMENSIONS *(continued)*

63A IP 44 surface mounting sockets

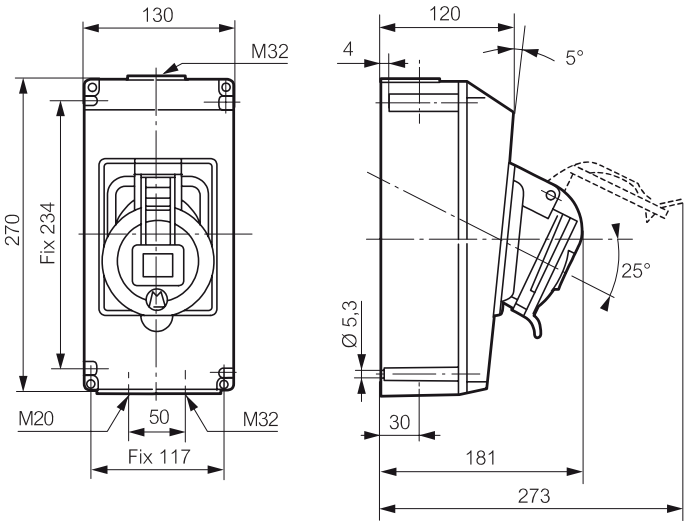

3. DIMENSIONS *(continued)*

Simple plastic and/or metal housings for LV and VLV 16/32A panel mounting sockets

LV 16 A. VLV 16 and 32A

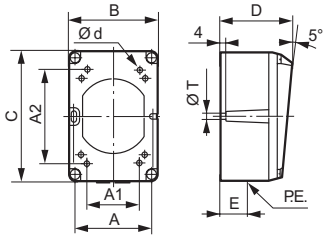

A1 and A2: resealable optional internal fixing points.
Metal housings equipped with:
- 2 earth terminals and 1 external terminal.
- 1 socket-outlet for the metal socket earthing pin.

BT 32 A

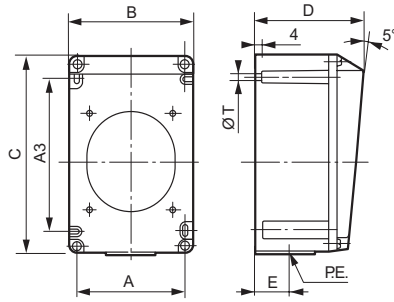

Metal housings equipped with:
- 2 earth terminals and 1 external terminal.
- 1 socket-outlet for the metal socket earthing pin.

Reversible Housing → Panel mounting sockets ↓	Material	Weight (kg)	Mountings A1	A2	Ød	A	A3	ØT	Dimensions (mm) B	C	D	E	P.E.
IP 44 - BT 16 A													
2P+T	Plastic	0.115	51	68	4.2	64	-	5.3	74	106	58	20	M 20
	Metal	0.400											
3P+T	Plasti	0.160	68	68	4.2	85	-	5.3	96	122	60	22	M 20
	Metal	0.520											
3P+T+N	Plastic	0.160	68	68	4.2	85	-	5.3	96	122	60	22	M 20
	Metal	0.520											
IP 44 - BT 32 A													
2P+T	Plastic	0.340	-	-	-	90	125	5.3	102	162	90	26	M 25
	Metal	0.910											
3P+T	Plastic	0.340	-	-	-	90	125	5.3	102	162	90	26	M 25
	Metal	0.910											
3P+T+N	Plastic	0.340	-	-	-	90	125	5.3	102	162	90	26	M 25
	Metal	0.910											
IP 44 - BT 16 A / 32 A													
2P	Plastic	0.115	51	68	4.2	64	-	5.3	74	106	58	20	M 25

3. DIMENSIONS *(continued)*

Metal or plastic through housings for 16/32/63A sockets

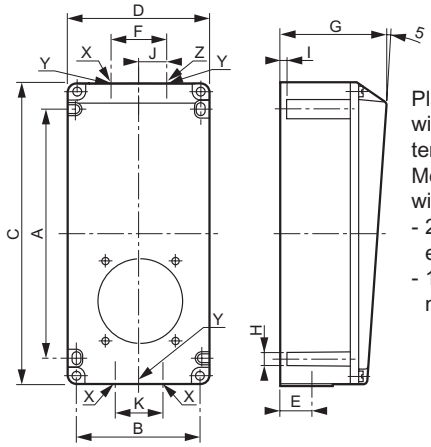

Plastic housings equipped with 2 connected earth terminals
Metal housings equipped with:
- 2 earth terminals and one external terminal.
- 1 socket-outlet for the metal socket earthing pin.

Reversible housings Panel mounting sockets	Material	Weight (kg)	Mountings A	B	H	Dimensions C	D	E	F	G	I	J	K	X	Y	Z
16 A																
2 P + ⏚	Plastic	0.330	145	74	5.3	182	86	22	34	75	4	-	-	-	M 20	-
	Metal	0.830														
3 P + ⏚	Plastic	0.440	175	88	5.3	212	100	22	40	77	4	-	-	-	M 20	-
	Metal	0.980														
3 P + N + ⏚	Plastic	0.440	175	88	5.3	212	100	22	40	77	4	-	-	-	M 20	-
	Metal	0.980														
32 A																
2 P + ⏚	Plastic	0.670	234	117	5.3	270	130	30	50	110	4	-	-	-	M 25	-
	Metal	1.730														
3 P + ⏚	Plastic	0.670	234	117	5.3	270	130	30	50	110	4	-	-	-	M 25	-
	Metal	1.730														
3 P + N + ⏚	Plastic	0.670	234	117	5.3	270	130	30	50	110	4	-	-	-	M 25	-
	Metal	1.730														
63 A																
2 P + ⏚	Plastic	2.000	260	152	6.3	300	170	40	-	150	8	50	70	M 32	-	M 20
	Metal	4.300		157												
3 P + ⏚	Plastic	2.000	260	152	6.3	300	170	40	-	150	8	50	70	M 32	-	M 20
	Metal	4.300		157												
3 P + N + ⏚	Plastic	2.000	260	152	6.3	300	170	40	-	150	8	50	70	M 32	-	M 20
	Metal	4.300		157												

3. DIMENSIONS *(continued)*

IP44 LV and VLV 16/32 A straight plugs

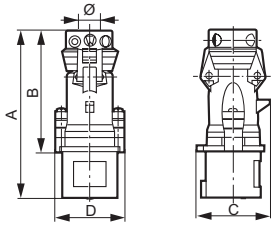

LV 63 A straight plugs

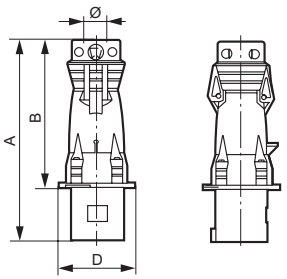

	Material	Weight (kg)	Dimensions A	B	C	D	Clamping/Grip Ø
LV 16 A							
2 P + ⏚	Plastic	0.150	135	100	57	55	8-15
	Metal	0.365					
	Rubber	0.205	135	100	60	61	8-15
3 P + ⏚	Plastic	0.175	139	103	65	60	8-15
	Metal	0.425					
	Rubber	0.260	139	103	68	66	8-15
3 P + N + ⏚	Plastic	0.210	154	118	73	66	10-18
	Metal	0.535					
	Rubber	0.300	154	118	77	72	10-18
LV 32 A							
2 P + ⏚	Plastic	0.260	164	119	78	70.5	10-18
	Metal	0.645					
	Rubber	0.360	164	119	81	76.5	10-18
3 P + ⏚	Plastic	0.260	164	119	78	70.5	12-22
	Metal	0.645					
	Rubber	0.360	164	119	81	76.5	12-22
3 P + N + ⏚	Plastic	0.300	170	125	86	77	12-22
	Metal	0.685					
	Rubber	0.415	170	125	89	83	12-22
LV 63 A							
2 P + ⏚	Plastic	0.580	255	188.5	-	102	16-26
	Rubber	0.900	255	188.5	-	110	16-26
3 P + ⏚	Plastic	0.640	255	188.5	-	102	18.5-29
	Rubber	0.980	255	188.5	-	110	18.5-29
3 P + N + ⏚	Plastic	0.700	255	188.5	-	102	20.5-32
	Rubber	1.050	255	188.5	-	110	20.5-32
VLV 16 A							
2 P	Plastic	0.180	142	107	62	55	8.5-22
VLV 32 A							
2 P	Plastic	0.180	142	107	62	55	8.5-22

3. DIMENSIONS *(continued)*

IP 44 - LV and VLV 16 and 32A angled plugs

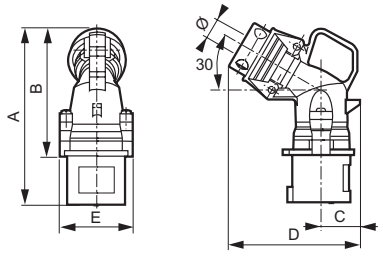

IP 44 - LV 63A angled plugs

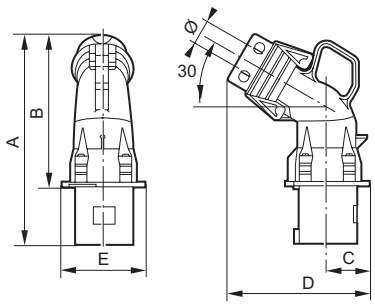

	Material	Weight (kg)	Dimensions A	B	C	D	E	Clamping/Grip Ø
LV 16 A								
2 P + ⏚	Plastic	0.145						
	Metal	0.395	136	100	29.5	100	55	8-15
	Rubber	0.230	136	100	29.5	100	61	8-15
3 P + ⏚	Plastic	0.185						
	Metal	0.455	141	105	33.5	105	60	8-15
	Rubber	0.290	141	105	33.5	105	66	8-15
3 P + N + ⏚	Plastic	0.220						
	Metal	0.565	150	114	37.5	114	66	10-18
	Rubber	0.330	150	114	37.5	114	72	10-18
LV 32 A								
2 P + ⏚	Plastic	0.275						
	Metal	0.745	161	116	39.5	116	70.5	10-18
	Rubber	0.390	161	116	39.5	116	76.5	10-18
3 P + ⏚	Plastic	0.275						
	Metal	0.745	161	116	39.5	116	70.5	12-22
	Rubber	0.390	161	116	39.5	116	76.5	12-22
3 P + N + ⏚	Plastic	0.320						
	Metal	0.790	167	122	44.5	122	77	12-22
	Rubber	0.435	167	122	44.5	122	83	12-22
LV 63 A								
2 P + ⏚	Metal	1.000	243.5	177	51	168	102	16-26
3 P + ⏚	Metal	1.150	243.5	177	51	168	102	18.5-29
	Rubber	1.030	243.5	177	51	168	110	18.5-29
3 P + N + ⏚	Metal	1.250	243.5	177	51	168	102	20.5-32
	Rubber	1.100	243.5	177	51	168	110	20.5-32
VLV 16 A								
2 P	Rubber	0.250	131	107	30	107	61	8.5-22
VLV 32 A								
2 P	Rubber	0.250	131	107	30	107	61	8.5-22

3.DIMENSIONS *(continued)*

IP 44 - LV and VLV 16 /32A and LV 63A mobile sockets

16/32A **63A**

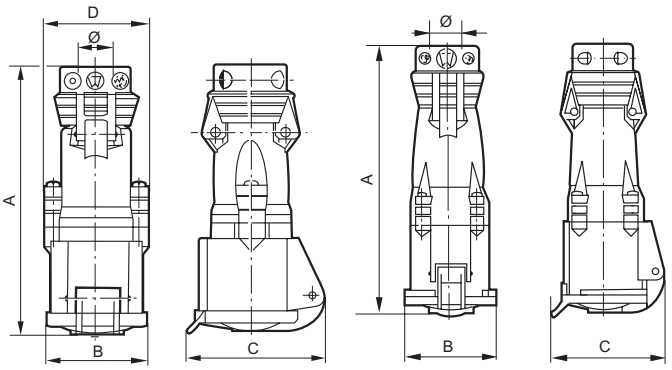

	Material	Weight (kg)	Dimensions A	B	C	D	Clamping/Grip Ø
LV 16 A							
2 P + ⏚	Plastic	0.170	147	54.5	74	55	8-15
	Rubber	0.250	147	58	74	61	8-15
3 P + ⏚	Plastic	0.200	151	61.5	81	60	8-15
	Rubber	0.285	151	65	81	66	8-15
3 P + N + ⏚	Plastic	0.245	172	69.5	90	66	10-18
	Rubber	0.335	172	72.5	90	72	10-18
LV 32 A							
2 P + ⏚	Plastic	0.300	177	71	93	70.5	10-18
	Rubber	0.400	177	74.5	93	76.5	10-18
3 P + ⏚	Plastic	0.300	177	71	93	70.5	12-22
	Rubber	0.400	177	74.5	93	76.5	12-22
3 P + N + ⏚	Plastic	0.350	183	77.5	100	77	12-22
	Rubber	0.475	183	80.5	100	83	12-22
LV 63 A							
2 P + ⏚	Plastic	0.700	273	96	119	-	16-26
	Rubber	1.200	273	110	124	-	16-26
3 P + ⏚	Plastic	0.770	273	96	119	-	18.5-29
	Rubber	1.300	273	110	124	-	18.5-29
3 P + N + ⏚	Plastic	0.830	273	96	119	-	20.5-32
	Rubber	1.400	273	110	124	-	20.5-32
VLV 16 A							
2 P	Plastic	0.190	148	54.5	74	55	8.5-22
VLV 32 A							
2 P	Rubber	0.240	148	58	74	61	8.5-22

3. DIMENSIONS *(continued)*

IP 44 16/32A plastic and/or metal panel appliance inlets

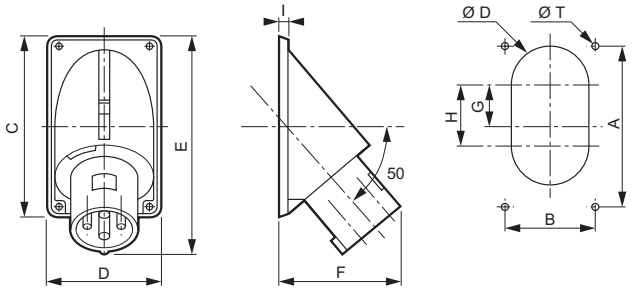

	Material	Weight (kg)	Drilling holes A	B	øT	øD	G	Dimensions H	C	D	E	F	I
LV 16 A													
2 P + ⏚	Plastic	0.140	94	62	4.5	40	-	-	104	72	121	78	6
	Metal	0.530											
3 P + ⏚	Plastic	0.160	109	83	4.5	40	-	-	120	94	135	86	6
	Metal	0.630											
3 P + N + ⏚	Plastic	0.190	109	83	4.5	40	-	-	120	94	139	86	6
	Metal	0.690											
LV 32 A													
2 P + ⏚	Plastic	0.280	149	90	5.5	40	-	-	160	101	176	111	6
	Metal	0.950											
3 P + ⏚	Plastic	0.280	149	90	5.5	40	-	-	160	101	176	111	6
	Metal	0.950											
3 P + N + ⏚	Plastic	0.320	149	90	5.5	40	-	-	160	101	174	108	6
	Metal	1.000											
LV 63 A													
2 P + ⏚	Plastic	0.560	163	93	6.5	80	42	62	183	113	221	120	8
3 P + ⏚	Plastic	0.630	163	93	6.5	80	42	62	183	113	221	120	8
	Metal	2.230											
3 P + N + ⏚	Plastic	0.690	163	93	6.5	80	42	62	183	113	221	120	8
	Metal	2.450											

NB: 16/32/63A surface mounting appliance inlets are made by assembling the panel mounting appliance inlet on the housing (see dimension on the next page).

3. DIMENSIONS (continued)

Plastic and metal housings for 16A, 32A and 63A appliance inlets

LV 16A

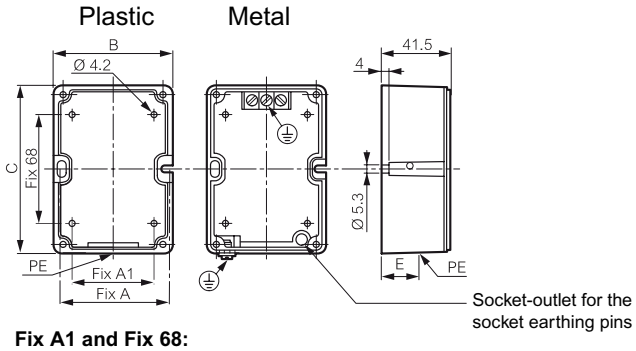

Fix A1 and Fix 68:
resealable optional internal fixing points

	Material	Weight (kg)	Dimensions (mm)					
			A	A1	B	C	E	CE
16A								
2P+E	Plastic	0.085	64	51	74	106	20	M20
	Metal	0.250					22	
3P+E	Plastic	0.110	85	68	96	122	22	M20
3P+N+E	Metal	0.360						

LV 32 A (p. 501, 505)
Equipped with 2 connected earth terminals, and 1 external terminal on the metal housing (decree dated 14/11/88)

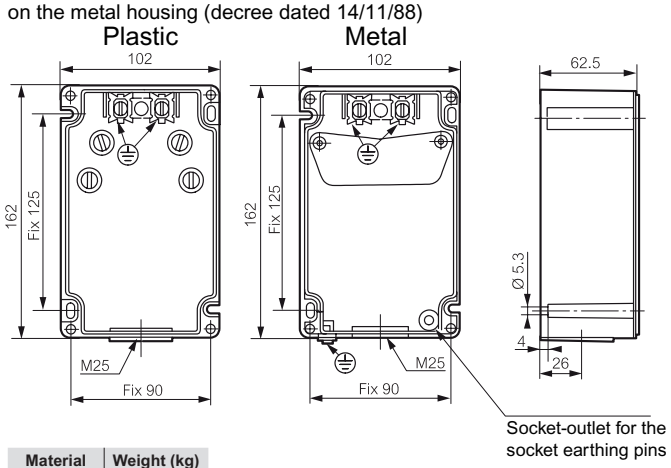

Material	Weight (kg)
Plastic	0.24
Metal	0.65

LV 63A

Equipped with 2 connected earth terminals, and 1 external terminal on the metal housing (decree dated 14/11/88)

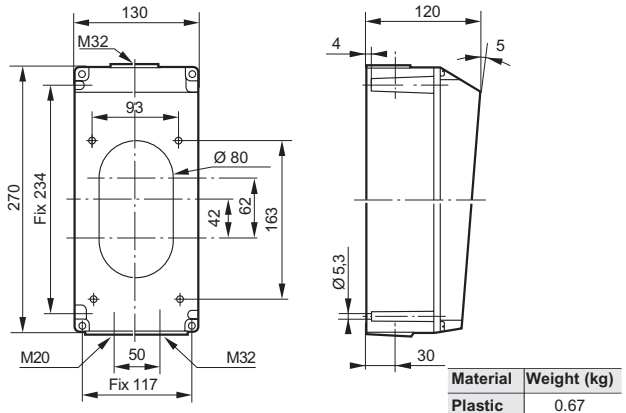

Material	Weight (kg)
Plastic	0.67
Metal	1.73

4. TECHNICAL DATA

4.1 Glow wire resistance
- 850°C for active parts
- 650°C for other components

4.2 Dielectric strength
3000V 50Hz

4.3 Temperature of use
Able to operate at:
- 50° to + 100°C the products have been previously wired above -20°C and there must be no mechanical constraints below -25°C.

4.4 UV resistance
- No change in colour or alteration to the material
  Radiation intensity: 550 W/m^2
- Test duration: 168 hours
- Infrared and ultra-violet filter in order to get as close to the solar spectrum as possible.

4.5 Ageing test
Thermoplastic material:
Ageing 5 days at 100°C - No cracks in the material should appear
Flap spring strength:
5000 opening/closing actions performed - Result compliant
Seal strength:
Result compliant: No dust or water in IP66/67 products
after 7 days of ageing at +80°C.

4.6. Material specifications (plastic)

Chemical agents	Plastic material
Acetaldehyde	++++
Ethyl acetate	++++
Acetic acid	- -
Chromic acid 50%	- -
Citric acid	++++
Formic acid	- -
Lactic acid	+++
Nitric acid 20%	- -
Perchloric acid	- -
Sulphuric acid <10%	-
Uric acid	++++
Ammonia solution 10%	++++
Benzene	++++
Benzol	- -
Potassium bicarbonate	++++
Sodium bicarbonate	++++
Bromine	- -
Butanol	+++
Lime	++++
Potassium chlorate	-
Sodium chlorate	- -
Dry chlorine	- -
Chloroform	++++
Vinyl chloride	++++
Zinc chloride	++++
Cream	++++
Cresols	- -
Household bleach	-
Sea water	++++
Distilled water	++++
Saline	++++
Ethanol	++++
Ether	++++
Fuel	++++
Glucose	++++
Glycerine	++++
Heptane	++++
Olive oil	++++
Hydraulic oils	++++
Fuel oils (1, 2, 3, 5A, 5B, 6)	++++
Diesel fuel oils (20, 30, 40, 50)	++++
Fruit juice	++++
Kerosene	++++
Lubricants	++++
Heating oil	++++
Molasses	++++
Methanol	+++
Silver nitrate	++++
Nitrobenzene	+++
Paraffin	++++
Potassium permanganate	- -
Petroleum	++++
Phenol 10%	- -
Liquified propane	++++
Lard	++++
Silicone	++++
Zinc sulphate	++++
Turpentine	+++
Carbon tetrachloride	- -
Toluene	++++
Whisky and wines	++++
Hylene	++++

++++ : Excellent resistance
+++ : Good resistance
- : Low resistance
- - : Poor resistance
NB: general information taken from specialist material sites

5. CONNECTION

5.1 Connection capacity

Type	Intensity	Conductor size (mm ≤)	Conductor type (mm ≤)
Surface mounting and Panel mounting socket	16/32 A TBT	4 to 10	Rigid
	16 A	1.5 to 4	Rigid
	32 A	2.5 to 10	Rigid
	63 A	6 to 25	Rigid
	125 A	25 to 70	Rigid
Appliance inlet	16/32 A TBT	4 to 10	Rigid
	16 A	1 to 2.5	Rigid
	32 A	2.5 to 6	Rigid
	63 A	6 to 16	Rigid
	125 A	16 to 50	Rigid
Plugs and Mobile sockets	16/32 A TBT	4 to 10	Flexible
	16 A	1 to 2.5	Flexible
	32 A	2.5 to 6	Flexible
	63 A	6 to 16	Flexible
	125 A	16 to 50	Flexible

5.2 Tightening torque of the connection terminal screws

- 16/32A VLV: from 1 to 1.2 Nm
- 16A LV: from 0.7 to 1 Nm
- 32A LV: from 0.7 to 1 Nm
- 63A LV: from 2 to 2.2 Nm for Phase and Earth
  from 0.7 to 1 Nm for Pilot
- 125A LV: from 3 to 4 Nm for Phase and Earth
  from 0.7 to 1 Nm for Pilot

6. WIRING CHART

Wiring chart example

Breaking via guide wire:

The guide wire is a control conductor used with the power conductor.
If it is interrupted, it breaks the power circuit using a contactor. This arrangement provides an electrical solution to the requirement for breaking circuits in excess of 32A (decree dated 14/11/88). An additional (shorter) pin is therefore added to the various models of sockets to perform this "guide wire" function.

Wiring chart example with guide circuit
Power on via push button
(mandatory for compliance in France with the decree dated 14/11/88)

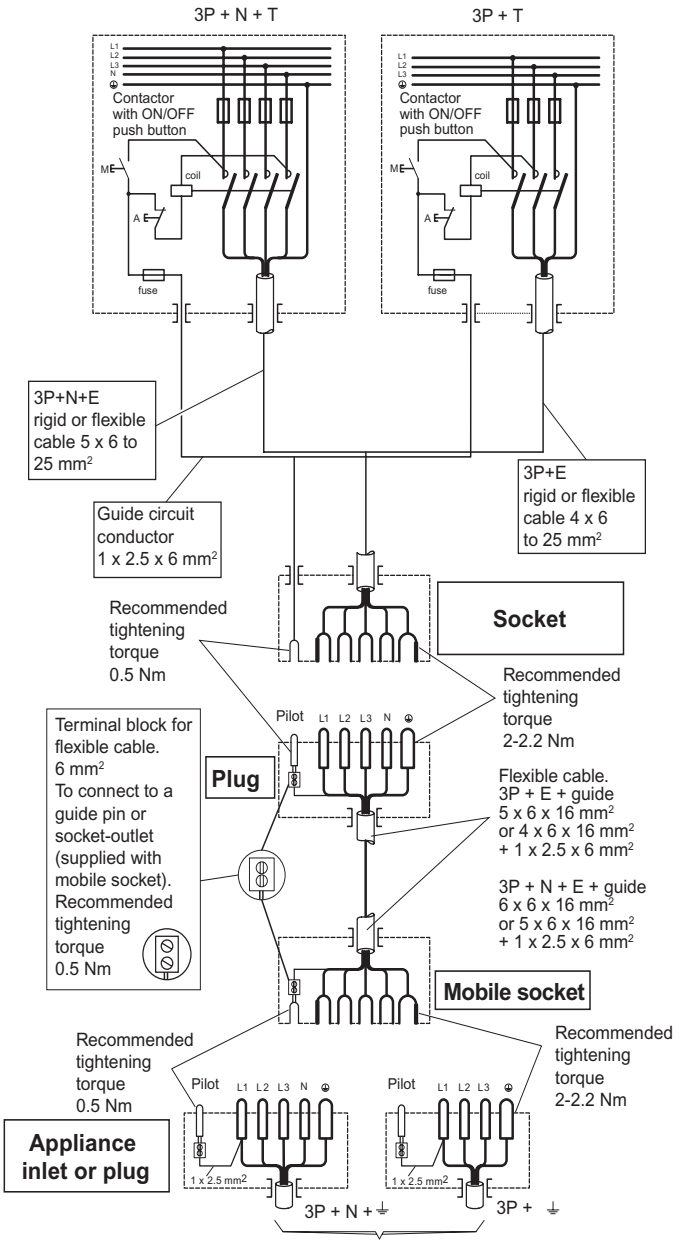

7. STANDARDS AND DECREES

- IEC 60309-1 and NF EN 60309-1 (design rules)
- IEC 60309-2 and NF EN 60309-2 (dimensional interchangeability requirements)
- IEC 60529 and NF EN 60529 (IP)
- IEC 62262 and NF EN 62262 (IK)
- Decree dated 14/11/88

8. ACCESSORIES

IP55 adapter socket for Mosaic 2-module mechanism
(excluding special surface mounting)
Cat. No: 539 49



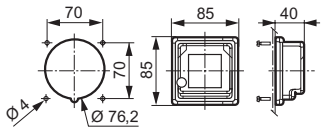

Adapter plate for ELV socket
(mounting on pre-drilled Hypra units)
Cat. No: 521 19



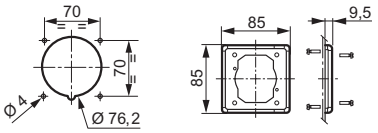

Blanking plug
Rubber material.
Can be adapted to appliance inlets or plugs.



		Cat. Nos
16A	2P+E	521 25
	3P+E	521 26
	3P+N+E	521 27
32A	2P+E	521 27
	3P+E	
	3P+N+E	527 99
63A	2P+E	536 99
	3P+E	
	3P+N+E	