# Bourdon tube pressure gauges, liquid filled,
# Type 213.53.0XX
# Item no.: 9023474

| Description | |
|---|---|
| Design according | EN 837-1 |
| Accuracy class | class 1.6 |
| Scale range | 0...40 bar |
| 2nd Scale or Special Scale | 2nd scale psi |
| **Constructional design** | |
| Process connection | 1/4 NPT |
| Connector location | back mount |
| Pressure element | Copper alloy |
| Movement | Copper alloy |
| Case | Crimp ring case (version 53) |
| Nominal size | 063 mm |
| Case filling fluid | glycerine |
| Pointer | plastic, black (double division) |
| Window | plastic, clear |
| Dial | plastic, white, with stop-pin |
| **Operating conditions** | |
| Pressure limitation | Steady: 3/4 x full scale value<br>Fluctuating: 2/3 x full scale value<br>Short time: Full scale value |
| Permissible ambient temperature | -20 ... +60 °C |
| Permissible medium temperature | +60°C maximum |
| Temperature effect when the temperature deviates from the reference temperature (+20°C) | Max. +-0.4 %/10 K of the span |
| Ingress protection | IP 65 |

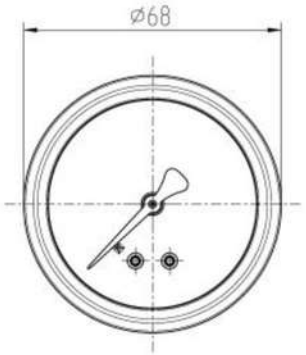


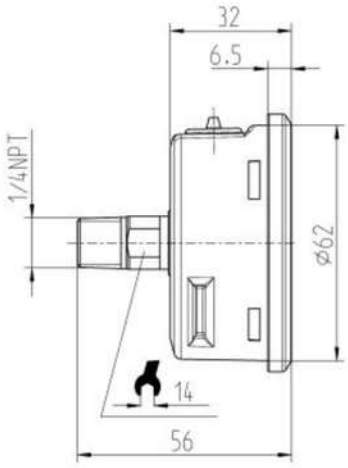




WIKA Instruments – 38 Avenue du Gros Chêne – 95220 HERBLAY
Phone0 820 95 10 10
info_fr@wika.com • http://www.wika.fr