Speedfit® plastic push-in fittings

Instruction Leaflet

Speedfit® plastic push-in fittings, pipe and valves should not be used for Gas, Fuel Oil or Compressed air applications.

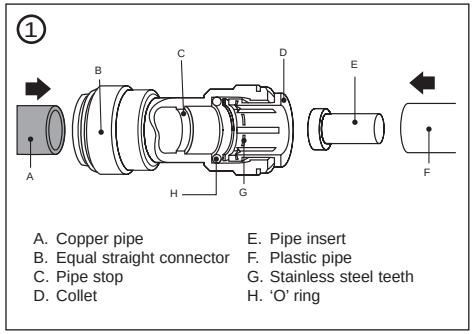

A. Copper pipe
B. Equal straight connector
C. Pipe stop
D. Collet
E. Pipe insert
F. Plastic pipe
G. Stainless steel teeth
H. 'O' ring

Do not insert fingers into fitting as the stainless steel teeth incorporated within the collet may cause injury.

Making a connection

Note: It is recommended for installations using plastic pipe, that pipe inserts are used (Figure 1). This is particularly important for hot water applications, connection to compression fittings and central heating applications.

Cut the pipe square, ensuring it is free of score marks, burrs and sharp edges.
If applicable fit pipe insert.
Push the pipe into the fitting to the internal pipe stop (Figure 1). The collet has stainless steel teeth which grip the pipe whilst the 'O' ring provides a permanent leak-proof seal.

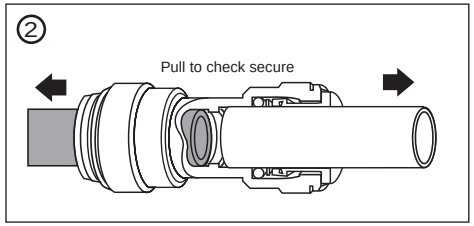

Pull on the pipe to check it is secure. It is good practice to test the system prior to leaving site and/or before use (Figure 2). If possible, system testing should take place at 10 bar (150lb/in2), or at site pressure up to 10 bar, for up to 10 mins.
Speedfit stop ends and plugs are particularly useful during this process, enabling outlets and fittings to be plugged easily and free of leaks.

Disconnecting the fitting

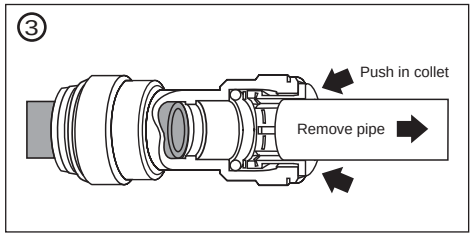

Ensure system is depressurised before removing fitting. Push in collet squarely against face of fitting. With the collet held in this position, the pipe can be withdrawn. The fitting can then be re-used.

Connection to copper and chrome plated copper pipe

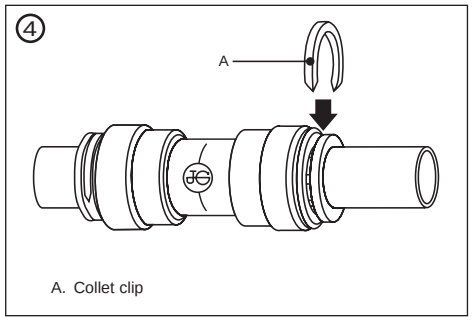

A. Collet clip

The fitting of metric O/D copper pipe follows the same sequence as for plastic. For chrome plated copper pipe the chrome plating should be removed to the depth of the pipe stop. To ensure maximum grip, the fitting of collet clips is recommended (Figure 4). For collet clips see RS catalogue plumbing/pipeline/valves/hose section.

Connection to boilers.

In order to minimise the effect of radiated heat, speedfit fittings and speedfit pipe should not be connected directly to a boiler or circulator. Use a run of copper pipe, not less than 350mm in length, between the Speedfit system and the connection to the boiler or circulator, as per BS5955 Part 8.
If a boiler incorporates a copper heat exchanger with connectors outside the casing, Speedfit can be connected directly to the boiler.

Connection to unsupported equipment

If speedfit pipe is being connected to pumps, valves, etc. that are not mounted on a supporting structure, the pipe must be clipped close to the connections to ensure adequate support and to assist in the reduction of vibration. For heavier equipment, ensure that it is fully and independently supported by appropriate metal brackets and that it does not rely solely on the pipework for support.

Pipe bending

Gentle bends can be made with pipe clips on either side of the bend, positioned to maintain the bend radius. Tighter bends can be achieved with 15mm pipe using angle brackets. The pipe should not be heated with a blowlamp or hot air gun.
Minimum bend radii for Speedfit pipe are as follows:

Pipe dia.		15mm	22mm
min radius	with angle brackets	50mm	-
	with clips	175mm	225mm

For bends of radii smaller than those shown, standard elbow fittings are recommended.
Recommended clip spacing

Pipe dia.	Run	Service Temperature		
		20°	60°	80°
15mm	Horizontal	500mm	400mm	300mm
	Vertical	800mm	600mm	500mm
22mm	Horizontal	800mm	600mm	500mm
	Vertical	1200mm	1000mm	800mm

Laying of pipe in concrete and masonry

Pipework hidden within solid floors, walls or ceilings should be sleeved and/or lagged. This is to meet the requirements of Water Supplies Byelaw 58 which states that pipework must be accessible for removal and replacement.

Exposed pipework

On long exposed runs of pipework, the expansion of Speedfit pipe (1% on length between 20 to 82°C) can cause it to sag between clip fixings. When this is undesirable, pipework can be boxed in or replaced with rigid copper pipe.
Speedfit pipe is stabilised to withstand limited exposure to ultra-violet radiation in sunlight but is not designed for permanent direct exposure. Under such conditions painting or lagging is required.

Chemical effects

Only water-based paints and wood preservatives should be used. Do not use oil or cellulose based paints, paint stripper or thinners. Speedfit fittings should not come into contact with solder flux or acid-based descalents. If there is a risk of any chemical treatments coming into contact with Speedfit, please contact the Technical Advisory Service first to check compatibility.

System flushing

As is usual practice, flushing of the system prior to the use of Speedfit is recommended to remove any contaminants /chemical residue from elsewhere in the system.

Cleaners, inhibitors and descalents

Use only Sentinel x100 x200 x300 x400 and leak sealer. For Sentinel see RS catalogue, cleaning and contact treatment section.

Pipework insulation

The insulation requirements for Speedfit pipe are the same as those for copper and should comply with BS6700 and BS5422.

Electrical continuity

The practice of using metal pipework for earthing was discontinued in 1966. However, where Speedfit forms a break in the continuity of existing metal pipework, which may have been used for earthing, then the electrical continuity should be reinstated by fixing a bonding lead.

Technical specification

● Working temperatures and pressures (as per BS7291)

		Nominal	Maximum
Central heating	3.0 bar at	92°C	105°C
Hot water	6.0 bar at	65°C	95°C
Cold water	12.0 bar at	20°C	20°C

● Expansion

1% on length between 20°C and 82°C

● Burst pressure

With copper or plastic pipe at 20°C:

Pipe size	Burst pressure
15mm	80 bar
22mm	50 bar

Tightening recommendations for plastic threads

Care should be taken when tightening plastic threads. In general hand tightening will be sufficient to give a leak proof seal and any further mechanical tightening will damage the fitting.
As a guide the following torque values are recommended.

Thread	Minimum	Maximum
1/2in. BSP	2.0Nm	3.0Nm
3/4in. BSP	2.5Nm	3.5Nm

The information provided in RS technical literature is believed to be accurate and reliable; however, RS Components assumes no responsibility for inaccuracies or omissions, or for the use of this information, and all use of such information shall be entirely at the user's own risk. No responsibility is assumed by RS Components for any infringements of patents or other rights of third parties which may result from its use.Specifications shown in RS Components technical literature are subject to change without notice.

RS Components, PO Box 99, Corby, Northants, NN17 9RS Telephone: 01536 201234
An Electrocomponents Company
© RS Components 1997