THERMALTRONICS

Check for latest datasheet

M7SB276 Datasheet

Technical Specifications

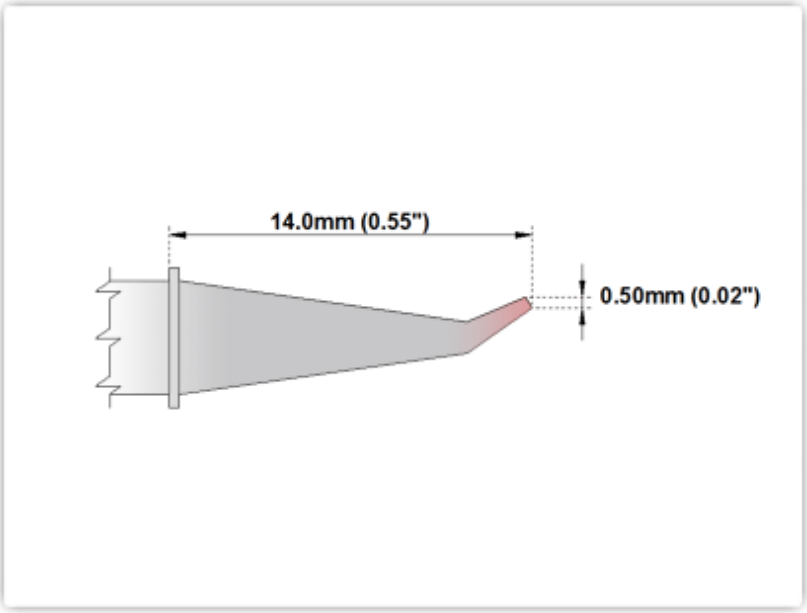

M7SB276

Bent Sharp 30° 0.5mm (0.02")

Tip Style:	Bent Sharp 30°
Tip Width:	0.50mm (0.02")
Tip Length:	14.00mm (0.55")

700 Type Cartridge[1]:	350°C - 398°C
RoHS Compliant[2] / Lead Free:	YES
Equivalent to:	STTC-144
For Use With:	TMT-9000S-1, TMT-9000S-2, MX-500, MX-5000, MX-5200

Material Composition

Patented Color Band



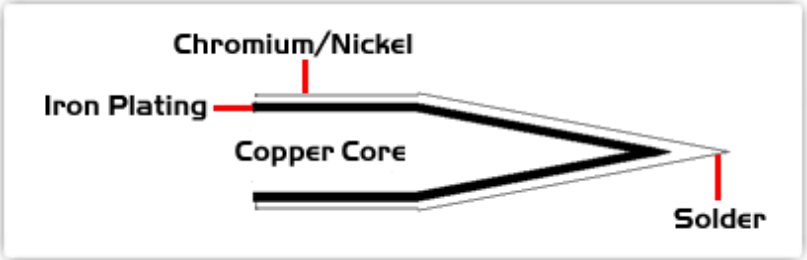

All components are RoHS compliant and Lead-Free.

1 Thermaltronics tip cartridges will typically idle within a temperature range of +/-1.1°C. However, there is variation in idle temperature across tip geometries within an individual temperature series. Thermaltronics offers a wide variety of tip geometries from 0.25mm fine point tip to 5mm chisel. The length and geometry of a tip will have an influence on the tip idle temperature. To accurately measure idle temperature it will depend greatly on the measurement method, technique and equipment used. Two different methods or the use of alternative equipment will produce different test results.

2 Please refer to http://www.rohs.gov.uk for details on RoHS Compliance.

Copyright © 2010-2015 Thermaltronics All Rights Reserved