Mini / MC55

MC55 Touch 24VDC O NPN Buzzer



Part No.:	**240.270.55**
Series:	**MC55**

MECHANICAL DATA	
Height	79 mm
Diameter	55 mm
Materials	PC
Dome colour	Tranclucent
Housing colour	Black
Protection category	IP65 IP69K
Connection	M12 plug 5-pole
Type of fixing	Built-in mounting
Working temperature minimum	-20°C
Working temperature maximum	+50°C
Weight with packaging	94 g
Product weight	66 g

ELECTRICAL DATA	
Operating voltage	24V
Operating voltage type	DC
Operating voltage tolerance	+/- 10%
Rated operational voltage	24 VDC
Rated operational current	60 mA
Continuous output current	max. 200mA
Protection class	Protection class 2
Pollution degree	3 In the connection area: 2
Overvoltage category	I

OPTICAL DATA	
Light source	LED
Light colour	MC 3 colours
Optical signal image	Permanent
Service life optical	50,000 h maximum

ACOUSTIC DATA	
Volume (max) at 1m distance	85
Acoustic signal image	Continuous tone
Audio frequency	3480 Hz
Acoustic service life	5,000 h minimum

APPROVAL DATA	
Conforms with CE	Yes

! For additional installation and mounting information, refer to the appropriate user guide at www.werma.com. This printed copy is for information only and is subject to alteration.

Mini / MC55

MC55 Touch 24VDC O NPN Buzzer

Conforms with RoHS directive	Yes
WEEE	Yes
Conforms with UL	cULus
UL Type Rating	Type 4X
Conforms with RoHS CN	10 years

! For additional installation and mounting information, refer to the appropriate user guide at www.werma.com. This printed copy is for information only and is subject to alteration.

Mini / MC55

MC55 Touch 24VDC O NPN Buzzer

DRAWING

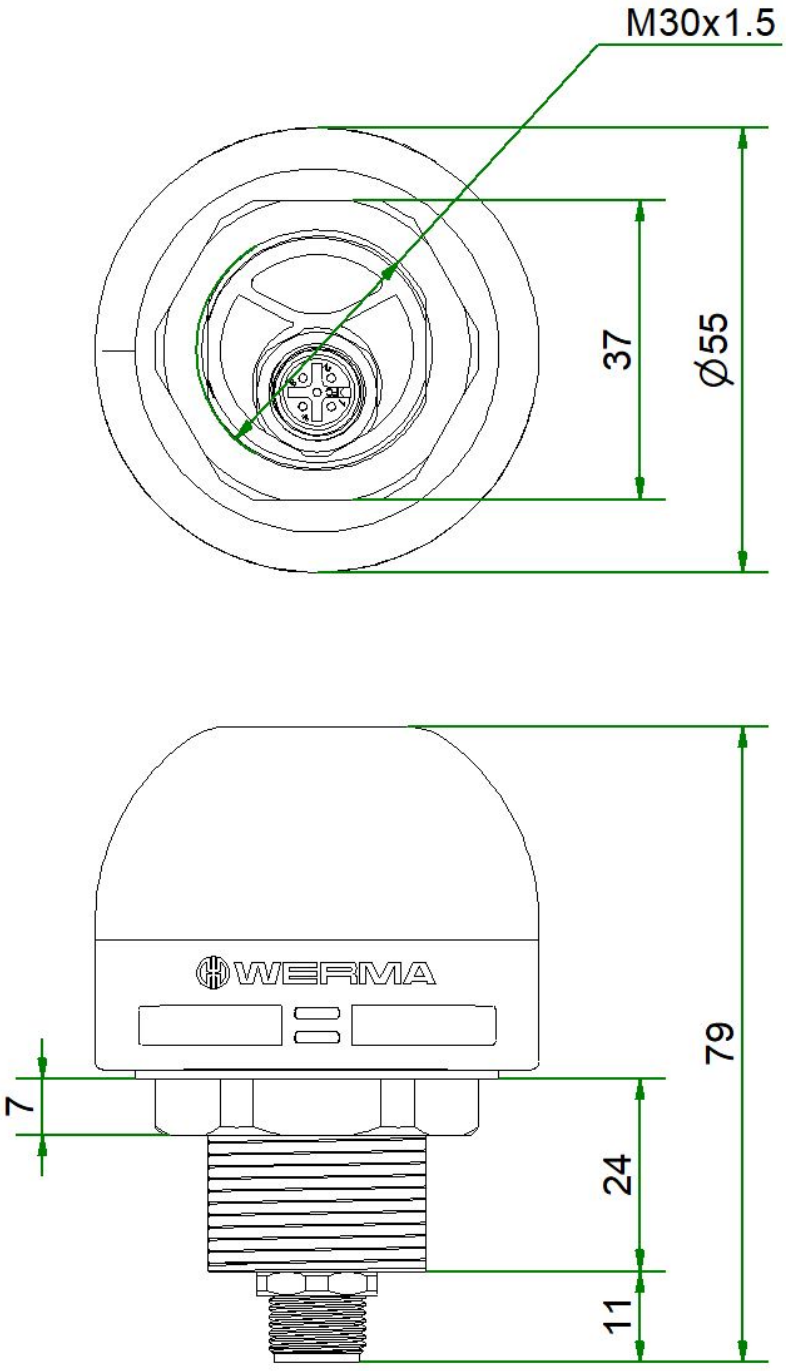

! For additional installation and mounting information, refer to the appropriate user guide at www.werma.com. This printed copy is for information only and is subject to alteration.