Inductive sensor
with extended switching distance
Bi2-EH6,5-AP6X-V1131

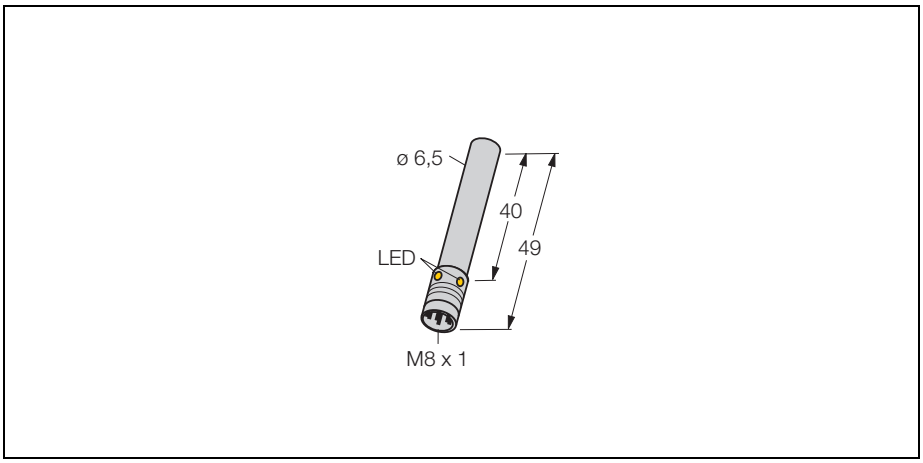

- **smooth barrel, 6.5 mm diameter**
- **stainless steel, 1.4404**
- **large detection range**
- **3-wire DC, 10…30 VDC**
- **normally open, pnp output**
- **connector, M8 x 1**

Wiring diagram

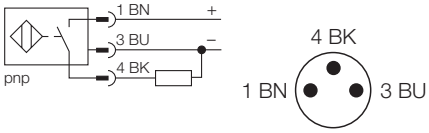

Type	Bi2-EH6,5-AP6X-V1131
Ident-No.	4612220
Rated operating distance Sn	2 mm
Mounting condition	flush
Assured sensing range	≤ (0,81 x Sn) mm
Correction factors	St37 = 1, V2A ~ 0.7, Ms ~ 0.4, Al ~ 0.3
Repeatability	≤ 2 %
Temperature drift	≤ ± 10 %
Hysteresis	3… 15 %
Ambient temperature	-25…+ 70 °C
Operating voltage	10… 30VDC
Residual ripple	≤ 10 % U_{ss}
DC rated operational current	≤ 150 mA
No-load current I_0	≤ 15 mA
Residual current	≤ 0.1 mA
Rated insulation voltage	≤ 0.5 kV
Short-circuit protection	yes / cyclic
Voltage drop at I_e	≤ 1.8V
Wire breakage / Reverse polarity protection	yes / complete
Output function	3-wire, normally open, pnp
Switching frequency	≤ 3 kHz
Housing	smooth barrel, 6.5 mm
Dimensions	49 mm
Housing material	metal, AISI 316L
Material active face	plastic, plastic, PA12-GF20
Connection	connectors, M8 x 1
Vibration resistance	55 Hz (1 mm)
Shock resistance	30g (11 ms)
Degree of protection	IP67
Display switch state	LED yellow

Functional principle

Inductive sensors are designed for wear-free and non-contact detection of metal objects. For this purpose they use a high-frequency electro-magnetic AC field that interacts with the target. With inductive sensors, this field is generated by an LC resonant circuit with a ferrite core coil.

• Edition: • 25.11.2008

Inductive sensor
with extended switching distance
Bi2-EH6,5-AP6X-V1131

Mounting instructions	minimum distances
Distance D	2 x B
Distance W	3 x Sn
Distance T	3 x B
Distance S	1,5 x B
Distance G	6 x Sn
Diameter of the active area B	Ø 6.5 mm

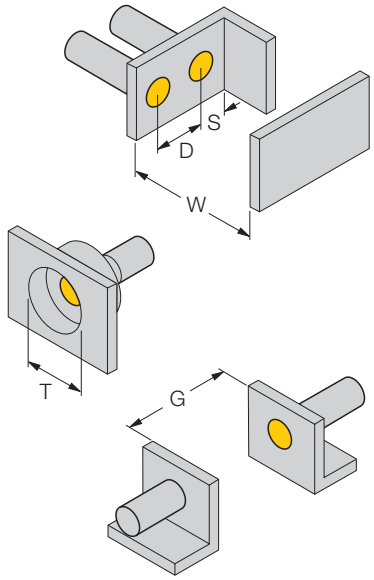

• Edition: • 25.11.2008