BOS 23K-GI-RD10-S4
BOS0171

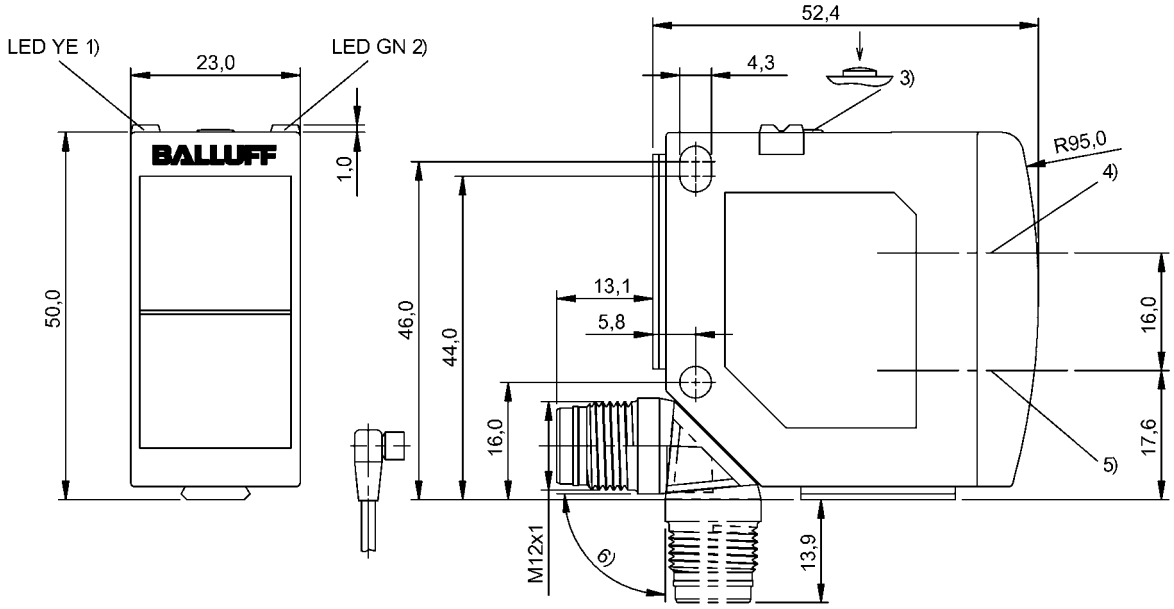

1) Output function/Error 2) Power/setting mode 3) Sn, light/dark 4) Optical axis receiver 5) Optical axis emitter 6) rotatable 270°

LISTED IND. CONT. EQ. 77HA for use in the secondary of a class 2 source of supply

Display/Operation

Adjuster	Key (1x)
Setting	Light-on/dark-on Rated switching distance (Sn)

Electrical connection

Connection	M12x1-Connector, 4-pole, A-coded
Polarity reversal protected	yes
Short-circuit protection	yes

Electrical data

Baud rate	38.4 kBaud
MTTF (40 °C)	494 a
No-load current Io max. at Ue	30 mA
Operating voltage Ub	18…30 VDC
Protected against miswiring	yes
Rated operating current Ie DC	100 mA
Rated operating voltage Ue DC	24 V
Ready delay tv max.	300 ms
Residual current Ir max.	50 µA
Switching frequency	600 Hz
Turn-off delay toff max.	0.83 ms
Turn-on delay ton max.	0.83 ms
Voltage drop Ud max. at Ie	2 V

Environmental conditions

Ambient temperature	-20…60 °C
IP rating per DIN 40050	IPx9K
Protection type IEC 60529	IP6x

Functional safety

Diagnostic coverage	0.0 %
Functional safety	no
Mission Time	10 a

General data

Approval/Conformity	CE Ecolab cULus
Basic standard	IEC 60947-5-2
Series	23K
Style	Square Connection can be rotated

BOS 23K-GI-RD10-S4
BOS0171

Material

Housing material	PC ABS
Material sensing surface	PMMA

Mechanical data

Dimension	23 x 51 x 52.4 mm
Fastening detail	Screw M4
Tightening torque max.	1.5 Nm

Optical data

Ambient light max.	5000 Lux
Beam characteristic	Focus, typical at 600 mm
LED group per IEC 62471	Exempt Group
Light type	LED Red light
Wave length	640 nm

Output/Interface

Input function	Same function as button Key disable on/off
Interface	IO-Link
Process data cycle min.	5 ms
Switching output	PNP/NPN Normally open/ Normally closed (NO/NC)

Range/Distance

Measuring range	0…2000 mm
Range	0…2000 mm
Rated operating distance Sn	2 m, Adjustable
Ripple max. (% of Ue)	10 %

Remarks

The sensor is functional again after the overload has been eliminated.
Teach-in also possible when object is in motion.
Reference object (target): gray card, 200 x 200, 90 % remission, axial approach.
For additional information, refer to user's guide.
Order accessories separately.
Do not press key using a pointed tool.

For further information on MTTF/B10d, please refer to the MTTF / B10d Certificate.

Specification of the MTTF value and the B10d value do not represent any binding quality and/or life expectancy guarantees.

Connector view

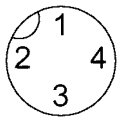

Wiring Diagram

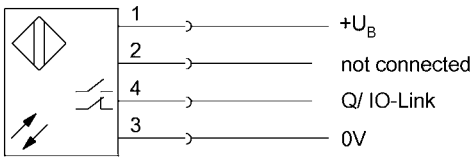

Symbols for Optoelectronic Sensors

