BFK15000A23060

CONTACTOR FOR POWER FACTOR CORRECTION WITH AC CONTROL CIRCUIT, INCLUDING LIMITING RESISTORS, MAXIMUM IEC OPERATIONAL POWER 400V = 100KVAR, COIL 230VAC 60HZ



Product designation			Power contactor
Product type designation			BFK150
Contact characteristics			
Number of poles		Nr.	3
Rated insulation voltage Ui IEC/EN		V	690
Rated impulse withstand voltage Uimp		kV	8
Operational frequency			
	min	Hz	25
	max	Hz	400
IEC Conventional free air thermal current Ith		A	165
Rated operational power AC-6b (T≤40°C)			
	230V	kvar	50
	400V	kvar	100
	440…480V	kvar	115
	690V	kvar	150
Short-time allowable current for 10s (IEC/EN60947-1)		A	1200
Protection fuse			
	gG (IEC)	A	160
Making capacity (RMS value)		A	1500
Breaking capacity at voltage			
	440V	A	1200
	500V	A	1025
	690V	A	905
Resistance per pole (average value)		mΩ	0.45
Power dissipation per pole (average value)			
	Ith	W	12
Tightening torque for terminals			
	min	Nm	6
	max	Nm	7
	min	lbin	4.4
	max	lbin	5.2
Tightening torque for coil terminal			
	min	Nm	0.8
	max	Nm	1
	min	lbin	0.59
	max	lbin	0.74
Max number of wires simultaneously connectable		Nr.	2
Conductor section			
AWG/Kcmil			
	max		2/0
Flexible w/o lug conductor section			
	min	mm²	1.5
	max	mm²	70
Flexible c/w lug conductor section			
	min	mm²	1.5

The characteristics described in this document are subject to updates or modifications at any time. The descriptions, technical and functional information, illustrations and instructions in this brochure are purely illustrative, and are consequently not contractually binding

		max	mm²	70
Power terminal protection according to IEC/EN 60529				IP20 front
Mechanical features				
Operating position				
		normal		Vertical plan
		allowable		±30°
Fixing				Screw / DIN rail 35mm
Weight			g	2095
Conductor section				
	AWG/kcmil conductor section			
		max		2/0
Operations				
Mechanical life			cycles	15000000
Electrical life			cycles	800000
Safety related data				
Performance level B10d according to EN/ISO 13489-1				
		rated load	cycles	400000
		mechanical load	cycles	15000000
EMC compatibility				yes
AC coil operating				
Rated AC voltage at 60Hz			V	230
AC operating voltage				
	of 60Hz coil powered at 60Hz			
		pick-up		
			min	%Us 80
			max	%Us 110
		drop-out		
			min	%Us 20
			max	%Us 55
AC average coil consumption at 20°C				
	of 60Hz coil powered at 60Hz			
			in-rush	VA 300
			holding	VA 20
Dissipation at holding ≤20°C 50Hz			W	6.5
Max cycles frequency				
Mechanical operation			cycles/h	1500
Operating times				
Average time for Us control				
	in AC			
		Closing NO		
			min	ms 16
			max	ms 32
		Opening NO		
			min	ms 9
			max	ms 24
UL technical data				
General USE				
	Contactor			
			AC current	A 165
Ambient conditions				
Temperature				
	Operating temperature			

The characteristics described in this document are subject to updates or modifications at any time. The descriptions, technical and functional information, illustrations and instructions in this brochure are purely illustrative, and are consequently not contractually binding

	min	°C	-50
	max	°C	70
Storage temperature			
	min	°C	-60
	max	°C	80
Max altitude		m	3000

Resistance & Protection

Pollution degree	3

Dimensions

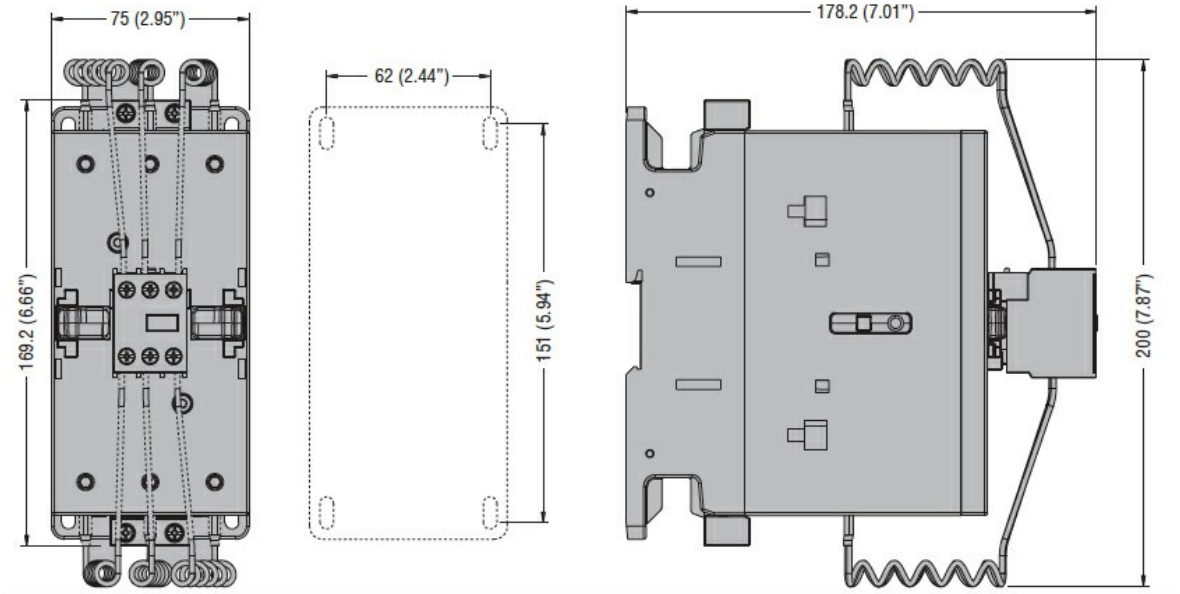

Wiring diagrams

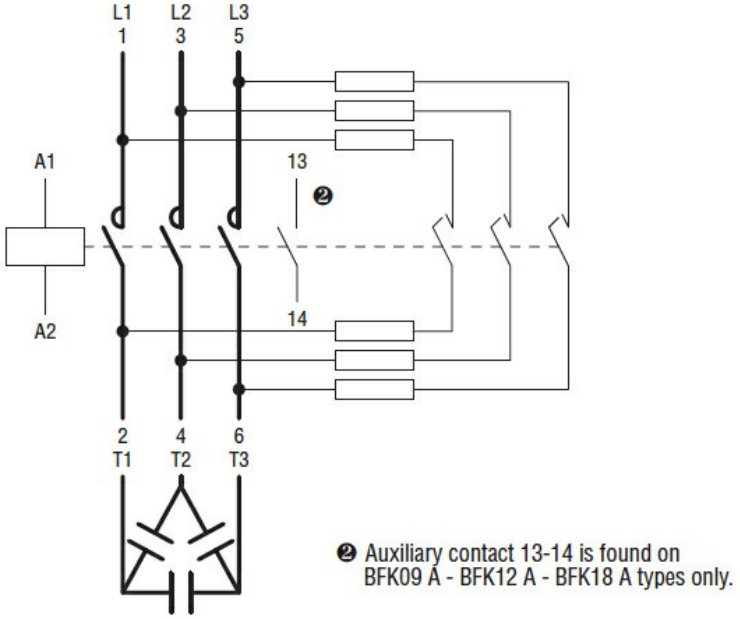

Certifications and compliance

Compliance

CSA C22.2 n° 60947-1
CSA C22.2 n° 60947-4-1
IEC/EN/BS 60947-1
IEC/EN/BS 60947-4-1
UL 60947-1
UL 60947-4-1

The characteristics described in this document are subject to updates or modifications at any time. The descriptions, technical and functional information, illustrations and instructions in this brochure are purely illustrative, and are consequently not contractually binding

Certificates

	CCC
	cULus

ETIM classification

ETIM 8.0	EC001079 - Capacitor contactor

The characteristics described in this document are subject to updates or modifications at any time. The descriptions, technical and functional information, illustrations and instructions in this brochure are purely illustrative, and are consequently not contractually binding