Pulse counters, electromechanical

Mini counters | 6 or 7 digits without reset (AC+DC) | W 16 / W 17





The mini totalisers W 16 and W 17 are not resettable, and have been designed for various front panel sizes in a wide variety of applications.

They offer an excellent price / performance ratio and are easy to operate.

Characteristics

- 6- or 7-digit miniature pulse counters, adding without reset
- Low power consumption
- Available for all common DC and AC voltages
- Versions available for DIN 48 x 24 mm and many other panel mount dimensions as well as for other types, e.g. PCB mount

Benefits

- Long service life / Protection IP41 (front side)

Applications

Battery-powered devices, heat and water consumption measurement, establishing tolls and charges, general quantity counting

Type series

Description / mounting	*Panel mount dim.*	*Housing*	*Display*	*6 digits*	*7 digits*
Panel mount + mounting clip, 34 x 23 mm [1.34 x 0.91"]	31 x 20 mm [0.79 x 0.25"]	plastic	front side	**W 16.20**	-
Panel mount + mounting clip, 48 x 24 mm [1.89 x 0.94"]	45 x 22.2 mm [1.77 x 0.87"]	plastic	front side	-	**W 17.50**
PCB mount, lying		sheet steel	on the top	**W 16.60**	-
Panel mount + mounting clip, 42 x 28 mm [1.65 x 1.10"]	37,5 x 23,5 mm [1.48 x 0.93"]	plastic	front side	-	**W 17.90**

Order information
- Art.-No.
- For special voltages, please give type, voltage, kind of voltage and series e.g.: W 16.20, 9 V DC, 05, black

Accessories	Dimensions in mm [inch]		Order-No.
Adapter front bezel, 53 x 28 [2.09 x 1.10]	For cut-out 50 x 25 [1.97 x 0.98] to cut-out 45 x 22.2 [1.77 x 0.87], with clip mounting for counters 48 x 24 [1.89 x 0.94]	anthracite	**T008180**
Adapter front bezel, 56 x 40 [2.20 x 1.57]	For cut-out 50 x 25 [1.97 x 0.98] to cut-out 45 x 22.2 [1.77 x 0.87], with screw mounting for counters 48 x 24 [1.89 x 0.94]	anthracite	**T008181**
Adapter front bezel, 72 x 36 [2.83 x 1.42]	For cut-out 68 x 33 [2.68 x 1.30] to cut-out 45 x 22.2 [1.77 x 0.87], for counters 48 x 24 [1.89 x 0.94], as set	black and silver anodised	**162704 Set**
Adapter front bezel, 48 x 48 [1.89 x 1.89]	For cut-out 45 x 45 [1.77 x 1.77] to cut-out 45 x 22.2 [1.77 x 0.87], with clip mounting for counters 48 x 24 [1.89 x 0.94]	black	**T008883**
Adapter front bezel, 60 x 50 [2.36 x 1.97]	For cut-out 54 x 29 [2.13 x 1.14] to cut-out 45 x 22.2 [1.77 x 0.87], with screw mounting and gasket for counters 48 x 24 [1.89 x 0.94]	black	**N003001**
Transparent cover, lockable, IP65	For cut-out 54 x 29 [2.13 x 1.14], for screw mounting to front bezel F1B or adapter front bezel N003001, for counters with cut-out 50 x 25 [1.97 x 0.98] or 45 x 22.2 [1.77 x 0.87]		**N003002**
Sealing cover type K1, IP65	Suitable for front bezel 60 x 50 [2.36 x 1.97], for screw mounting of electromech. counters and via adapter front bezel N003001 for counters 48 x 24 [1.89 x 0.94]		**G008301**
Mounting frame with cut-out 50 x 25 [2.36 x 1.97] via separate adapter also for 45 x 22.2 [1.77 x 0.87]	For snap-on mounting on 35 [1.38] top-hat DIN rail, for counters 53 x 28 [2.09 x 1.10] and via separate adapter (T008180) for counters 48 x 24 [1.89 x 0.94]	chromated	**G300004**

Suitable gaskets as well as further accessories can be found in the accessories section or in the accessories area of our website at: www.kuebler.com/accessories.

1) On request

© Fritz Kübler GmbH, subject to errors and changes. 10/2013

Mini counters | 6 or 7 digits without reset (AC+DC) | W 16 / W 17

Technical data

Electrical connection		
	panel mount, base mount	flying leads, AWG 22 approx. 150 mm [5.91“] ø 0.34 mm², 6 mm [0.24“] stripped wire ends, tinned
	PCB mount	round pin ø 1.6 mm [0.063“]
Rated voltage	type 05 (8 Hz)	1.5 / 3 / 4.5 / 5 / 6 / 12 V DC (+15%, -5%)
	type 0 (10 Hz)	12 / 24 / 48 / 115 / 185 V DC ±10%
	type a0 (10 Hz)	24 / 48 / 115/ 230 V AC, ±10 %
Cycle duration factor		100 %
Height of figures		4 x 1.7 mm [0.16 x 0.067“]
Colour of figures		white on black
Counting mechanism shaft		stainless steel
Operating temperature		-10°C ... +50°C [+14°F ... +122°F] (non-condensing)
Mounting position		any
Operating life		> 50 x 10^6 pulses
Protection		IP41 (front side)
Weight		approx. 50 g [1.76 oz]

Options

Electrical connection		- round pins ø 1.6 mm [0.063“] and push on connectors (Art.-No.: 1.161.XXX.XXX) - with flat pin 0.8 x 2.8 mm [0.032 x 0.11“] (Art.-No.: 1.169.XXX.XXX) - with flat pin 0.8 x 6.3 mm [0.032 x 0.25“] and push on connectors (Art.-No.: 1.165.XXX.XXX) - with open screw terminals (Art.-No.: 1.164.XXX.XXX.023)
Colour of housing (availability see table)	grey	Art.-No.: X.XXX.XX0.XXX
	black	Art.-No.: X.XXX.XX1.XXX
Extended temperature range		on request
With lens for digit height 5 or 6.3 mm		on request

Connection diagram

type 0 a.1, DC



IK = Pulse contact

type a, AC

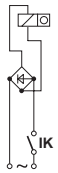

Type / Counting mechanism

Voltage	Type	Pulse frequency max.	Pulse on time min.	Pulse interval min.	Power consumption approx.	Permi. residual ripple max.
V DC	05	8 Hz	50 ms	75 ms	50 mW	5 %
V DC	0	10 Hz	50 ms	50 ms	0.5 W (≤115 V) 1 W (185 V)	48 %
V AC	a0	10 Hz	50 ms	50 ms	0.75 VA (≤ 115 V) 1.5 VA (230 V)	–

Panel mount with mounting clip

Panel mount dimensions 31 x 20 [1.22 x 0.79]

Type W 16.20



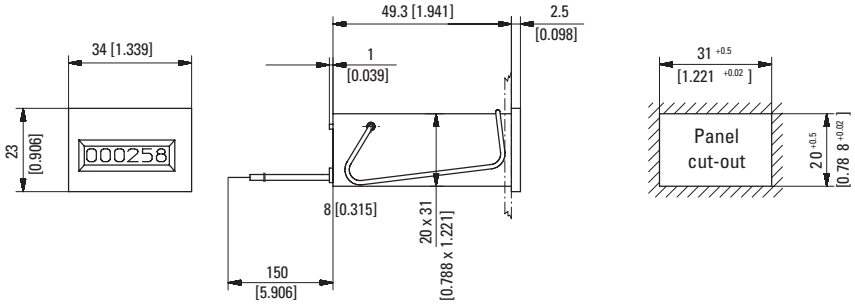

Colour of housing black: Art.-No. 1.160.201.XXX

Type	Voltage	Display	Art.-No. 12 V	24 V	115 V	230 V
W 16.20	DC (8 Hz) / 05	6 digits	**1.160.200.049**	**1.160.200.050**		
	DC (10 Hz) / 0		**1.160.200.012**	**1.160.200.013** 1)		
	AC (10 Hz) / a0			**1.160.200.051**	**1.160.200.054**	**1.160.200.056** 1)

Further stock types:
1.160.201.013 24 V DC/0sw
1.160.201.056 230 V AC/a0sw

Dimensions in mm [inch]

1) Stock types

© Fritz Kübler GmbH, subject to errors and changes. 10/2013

Mini counters | 6 or 7 digits without reset (AC+DC) | W 16 / W 17

Panel mount with mounting clip 48 x 24 [1.89 x 0.94]
Panel mount dimensions 45 x 22.2 [1.77 x 0.87]

Type W 17.50



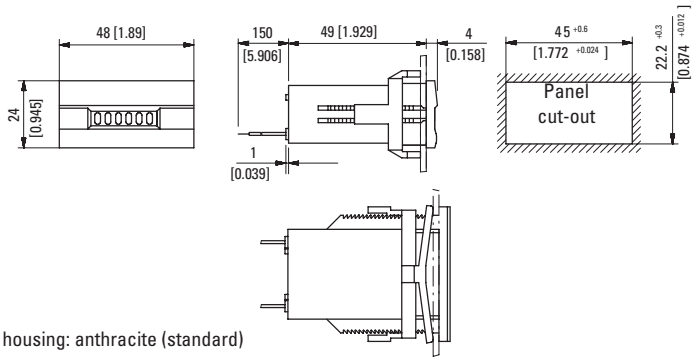

Colour of housing: anthracite (standard)

Type	Voltage	Display	Art.-No. 12 V	24 V	115 V	230 V	
W 17.50	DC (8 Hz) / 05	7 digits	**1.740.500.049.550**	**1.740.500.050.550**			
	DC (10 Hz) / 0		**1.740.500.012.550** 1)	**1.740.500.013.550** 1)			
	AC (10 Hz) / a0			**1.740.500.051.550**	**1.740.500.054.550**	**1.740.500.056.550** 1)	

PCB mount, sheet steel
Display wide side

Type W 16.60



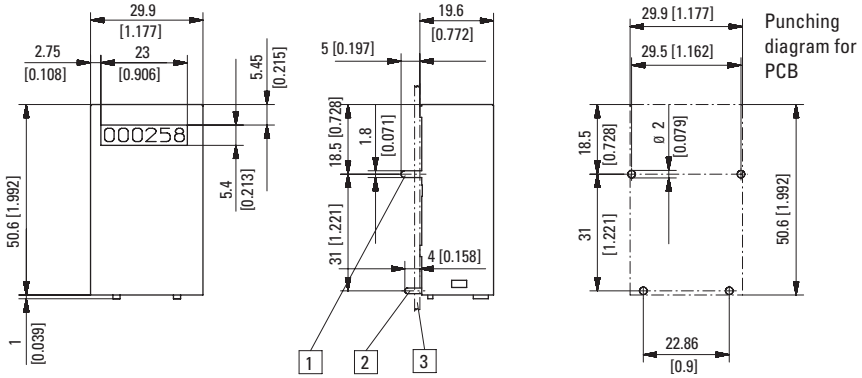

1 Mounting pins 1.8 x 0.4 [0.071 x 0.016] 2 Coil connections ø 0.16 [0.006] 3 PCB
Colour of housing blue (zinc-plated)

Type	Voltage	Display	Art.-No. 12 V	24 V	115 V	230 V	
W 16.60	DC (10 Hz) / 0	6 digits	**1.160.601.012**	**1.160.601.013**			

Panel mount with mounting clip
Panel mount dimensions 37.5 x 23.5 [1.48 x 0.93]

Type W 17.90



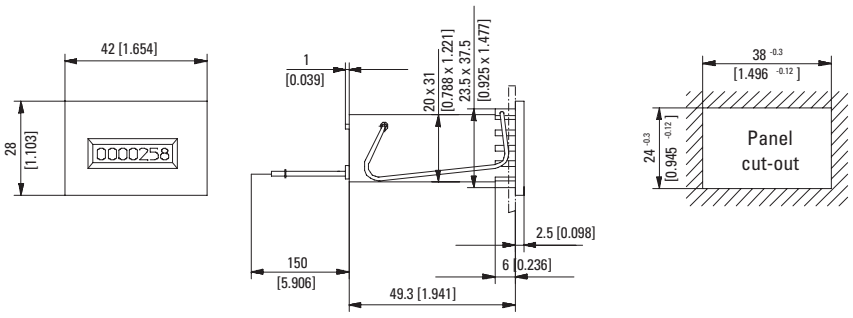

Colour of housing black: Art.-No. 1.XXX.901.XXX

Type	Voltage	Display	Art.-No. 12 V	24 V	115 V	230 V	
W 17.90	DC (8 Hz) / 05	7 digits	**1.740.900.049**	**1.740.900.050**			
	DC (10 Hz) / 0		**1.740.900.012**	**1.740.900.013**			
	AC (10 Hz) / a0				**1.740.900.054**	**1.740.900.056**	

Dimensions in mm [inch]

1) Stock types

© Fritz Kübler GmbH, subject to errors and changes. 10/2013