Brand of NTN corporation

Technical data

UKPE210H

Bearing units



Grey cast housing, radial insert ball bearing with adapter sleeve,seal with slinger

KIT CONTENT

UK210G2H, PE210

VISUAL (S)

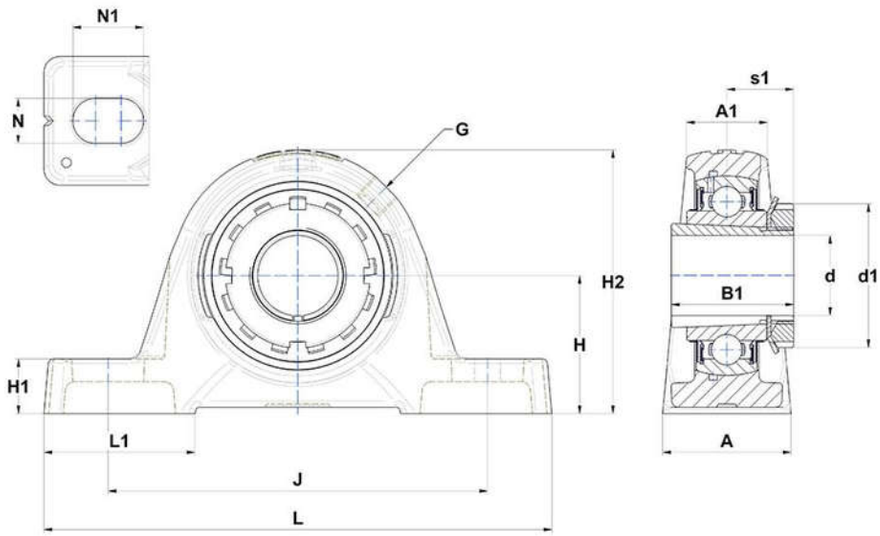

PRODUCT DEFINITION

Brand	SNR
A - Housing width	54 mm
A1 - Housing top width	34 mm
B - Width of Inner Ring	31 mm
d - Shaft diameter	45 mm
d1 - Outer dia of eccent. Lock. collar / nut of adapter sleeve	70 mm

PRODUCT DEFINITION	
G - Grease fitting	R1/8"
H - Distance mounting base to centerline spheric. seating diam.	57,2 mm
H1 - Housing foot height	21,5 mm
H2 - Housing height	115 mm
J - Mounting holes distance	158 mm
L - Housing length	200 mm
L1 - Housing foot length	61 mm
N - Mounting hole dimension	18 mm
N1 - Mounting hole length	23 mm
s1 - Distance nut to middle of bearing raceway	27,5 mm

PRODUCT PERFORMANCE	
C - Dynamic load rating	35100000 mN
C0 - Static load rating	23200000 mN
Operating temperature min.	253,15 °K
Operating temperature max.	373,15 °K

OTHER FEATURES	
Mass	2,73 kg
Adapter sleeve designation	H2310