IA5137

Inductive sensor

IAE3010-APKG/US/90°

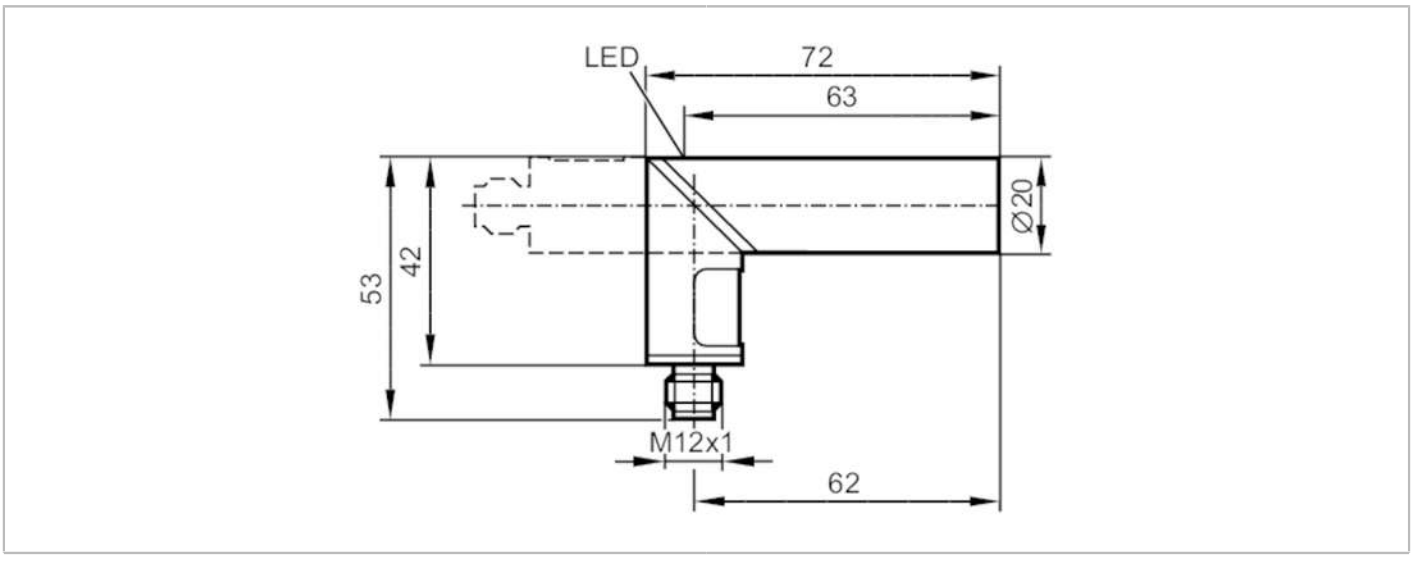

Product characteristics		
Electrical design		PNP
Output function		normally closed
Sensing range	[mm]	10
Housing		cylindrical
Dimensions	[mm]	Ø 20 / L = 72
Electrical data		
Operating voltage	[V]	10...36 DC
Current consumption	[mA]	< 15; (24 V)
Protection class		III
Reverse polarity protection		yes
Outputs		
Electrical design		PNP
Output function		normally closed
Max. voltage drop switching output DC	[V]	2.5
Permanent current rating of switching output DC	[mA]	250
Switching frequency DC	[Hz]	300
Short-circuit protection		yes
Type of short-circuit protection		pulsed
Overload protection		yes
Detection zone		
Sensing range	[mm]	10
Real sensing range Sr	[mm]	10 ± 10 %
Operating distance	[mm]	0...8.1
Accuracy / deviations		
Correction factor		steel: 1 / stainless steel: 0.7 / brass: 0.4 / aluminium: 0.3 / copper: 0.2

IA5137

Inductive sensor

IAE3010-APKG/US/90°

Hysteresis	[% of Sr]	1...15	
Switch point drift	[% of Sr]	-10...10	
Operating conditions			
Ambient temperature	[°C]	-25...80	
Protection		IP 65	
Tests / approvals			
EMC		EN 61000-4-2 ESD	- CD / 8 kV AD
		EN 61000-4-3 HF radiated	3 V
		EN 61000-4-4 Burst	2 kV
		EN 61000-4-5 Surge	0,5 kV line to line, Ri: 2 Ohm
		EN 61000-4-6 HF conducted	3 V
		EN 55011	class B
Mechanical data			
Weight	[g]	99.3	
Housing		cylindrical	
Mounting		non-flush mountable	
Dimensions	[mm]	Ø 20 / L = 72	
Materials		PBT; LED window: PC	
Displays / operating elements			
Display		switching status	1 x LED, yellow
Accessories			
Items supplied		Mounting clamps: 1	
Remarks			
Pack quantity		1 pcs.	
Electrical connection - plug			

Connector: 1 x M12; coding: A



IA5137

Inductive sensor

IAE3010-APKG/US/90°

Connection

