# DATASHEET - M22-XAK2




**Label, emergency switching off, yellow, D=90mm, 4 languages, DE, EN, ES, PT**

| | |
|---|---|
| **Part no.** | **M22-XAK2** |
| **Catalog No.** | **216466** |
| **Alternate Catalog No.** | **M22-XAK2Q** |

## Delivery program

| | | | |
|---|---|---|---|
| Product range | | | Accessories |
| Basic function accessories | | | Emergency-stop labels |
| Form | | | Diameter = 90 mm |
| Name | | | Four languages |
| Language | | | de, en, es, pt |
| **Colour** | | | |
| | | | yellow |
| | | |  |
| RAL Value | | | RAL 1004 |
| Degree of Protection | | | IP66 |
| Connection to SmartWire-DT | | | no |
| **Notes** | | | |
| Lettering black | | | |

## Technical data

### General

| | | | |
|---|---|---|---|
| Degree of Protection | | | IP66 |
| Ambient temperature | | | |
| Open | | °C | -25 - +70 |
| shipping classification | | | DNV<br>GL<br>LR |

## Design verification as per IEC/EN 61439

| | | | |
|---|---|---|---|
| Technical data for design verification | | | |
| Rated operational current for specified heat dissipation | $I_n$ | A | 0 |
| Heat dissipation per pole, current-dependent | $P_{vid}$ | W | 0 |
| Equipment heat dissipation, current-dependent | $P_{vid}$ | W | 0 |
| Static heat dissipation, non-current-dependent | $P_{vs}$ | W | 0 |
| Heat dissipation capacity | $P_{diss}$ | W | 0 |
| Operating ambient temperature min. | | °C | -25 |
| Operating ambient temperature max. | | °C | 70 |
| IEC/EN 61439 design verification | | | |

| | | | |
|---|---|---|---|
| 10.2 Strength of materials and parts | | | |
| 10.2.2 Corrosion resistance | | | Meets the product standard's requirements. |
| 10.2.3.1 Verification of thermal stability of enclosures | | | Meets the product standard's requirements. |
| 10.2.3.2 Verification of resistance of insulating materials to normal heat | | | Meets the product standard's requirements. |
| 10.2.3.3 Verification of resistance of insulating materials to abnormal heat and fire due to internal electric effects | | | Meets the product standard's requirements. |
| 10.2.4 Resistance to ultra-violet (UV) radiation | | | Please enquire |
| 10.2.5 Lifting | | | Does not apply, since the entire switchgear needs to be evaluated. |
| 10.2.6 Mechanical impact | | | Does not apply, since the entire switchgear needs to be evaluated. |
| 10.2.7 Inscriptions | | | Meets the product standard's requirements. |
| 10.3 Degree of protection of ASSEMBLIES | | | Does not apply, since the entire switchgear needs to be evaluated. |
| 10.4 Clearances and creepage distances | | | Meets the product standard's requirements. |
| 10.5 Protection against electric shock | | | Does not apply, since the entire switchgear needs to be evaluated. |
| 10.6 Incorporation of switching devices and components | | | Does not apply, since the entire switchgear needs to be evaluated. |
| 10.7 Internal electrical circuits and connections | | | Is the panel builder's responsibility. |
| 10.8 Connections for external conductors | | | Is the panel builder's responsibility. |
| 10.9 Insulation properties | | | |
| 10.9.2 Power-frequency electric strength | | | Is the panel builder's responsibility. |
| 10.9.3 Impulse withstand voltage | | | Is the panel builder's responsibility. |
| 10.9.4 Testing of enclosures made of insulating material | | | Is the panel builder's responsibility. |
| 10.10 Temperature rise | | | Not applicable. |
| 10.11 Short-circuit rating | | | Is the panel builder's responsibility. The specifications for the switchgear must be observed. |
| 10.12 Electromagnetic compatibility | | | Is the panel builder's responsibility. The specifications for the switchgear must be observed. |
| 10.13 Mechanical function | | | The device meets the requirements, provided the information in the instruction leaflet (IL) is observed. |

## Technical data ETIM 7.0

| | | | |
|---|---|---|---|
| Low-voltage industrial components (EG000017) / Text plate for control circuit devices (EC000624) | | | |
| Electric engineering, automation, process control engineering / Low-voltage switch technology / Command and alarm device / Identification plate for command devices (ecl@ss10.0.1-27-37-12-25 [AKF043014]) | | | |
| Imprint | | | Other |
| Imprint ISO symbols | | | Other |
| Colour | | | Yellow |
| Shape | | | Round |
| Width | | mm | 90 |
| Height | | mm | 90 |
| Outer diameter | | mm | 90 |

## Approvals

| | | | |
|---|---|---|---|
| North America Certification | | | UL/CSA certification not required |

## Dimensions

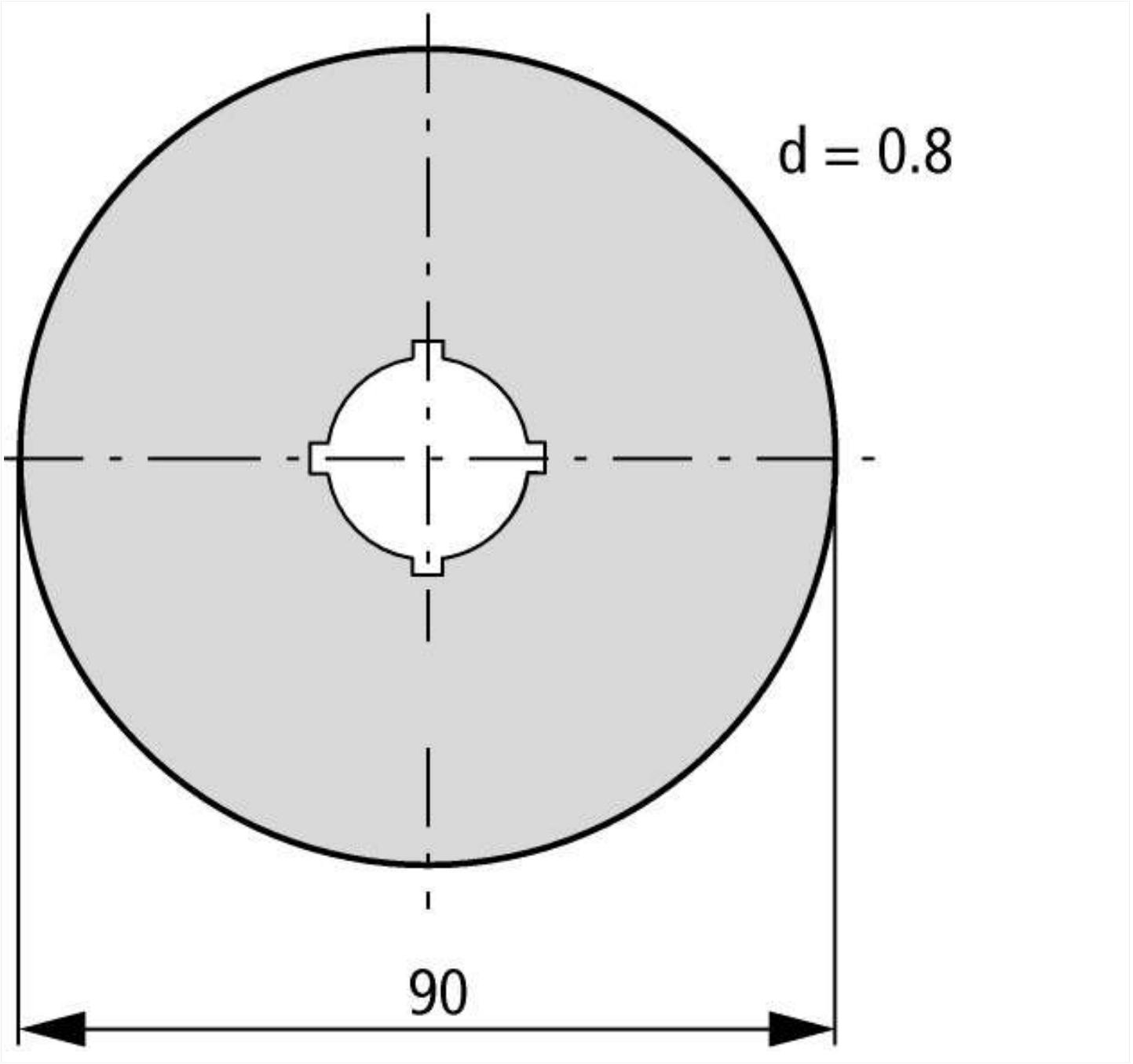



© 05/2021 by Eaton Industries GmbH