# DATASHEET



## EX-BN 20-10Z-3G/D

- 1 Reed contakts
- Explosion protection for ATEX Zones 2 and 22
- Aluminium enlosure
- 104 mm x 52 mm x 47 mm
- Actuating distance up to 50 mm depending on actuating magnet and version
- Non-contact principle
- Screw connection

## Data

### Ordering data

| | |
|---|---|
| Product type description | EX-BN 20-10Z-3G/D |
| Article number (order number) | 101189041 |
| EAN (European Article Number) | 4030661345871 |
| eCl@ss number, version 11.0 | 27-27-01-05 |
| eCl@ss number, version 9.0 | 27-27-01-05 |
| ETIM number, version 7.0 | EC002544 |
| ETIM number, version 6.0 | EC002544 |

### Explosion protection

| | |
|---|---|
| Explosion protection: regulations | EN IEC 60079-0<br>EN IEC 60079-15<br>EN 60079-31 |
| Explosion protection zones | 2<br>22 |
| Explosion protection category | 3G<br>3D |
| Explosion protection designation | II 3G Ex nC IIC T5 Gc X<br>II 3D Ex tc IIIC T90°C Dc X |

| | |
|---|---|
| Manufacturer declaration | ATEX Zone 2 and 22 |

## General data

| | |
|---|---|
| Working principle | Magnetic drive |
| Housing construction form | rectangular |
| Housing material | Light-alloy diecast, paint finish |
| Active area | Metal film |
| Gross weight | 315 g |

## General data - Features

| | |
|---|---|
| bias magnet | Yes |
| Number of normally open (NO) | 1 |

## Mechanical data

| | |
|---|---|
| Actuating panels | lateral |
| Active area | lateral |
| Actuating element | Magnet |
| Mechanical life, minimum | 1,000,000,000 Operations |
| Impact energy, maximum | 4 J |
| Actuating speed, maximum | 18 m/s |

## Mechanical data - Switching distances according EN IEC 60947-5-3

| | |
|---|---|
| Switching distance $S_n$ | 12 mm ... 45 mm |
| Note (Switching distance Sn) | Actuating distance up to 45 mm depending on version and actuating magnet |
| Repeat accuracy R | 0.3 mm |

## Mechanical data - Connection technique

| | |
|---|---|
| Termination | Screw terminals M20 x 1.5 |
| Cable cross-section of the cable glands, minimum | 6 mm |

| | |
|---|---|
| Cable cross-section of the cable glands, maximum | 10 mm |

## Mechanical data - Dimensions

| | |
|---|---|
| Length of sensor | 47 mm |
| Width of sensor | 104 mm |
| Height of sensor | 52 mm |

## Ambient conditions

| | |
|---|---|
| Degree of protection | IP67 |
| Ambient temperature | -15 ... +70 °C |
| Storage and transport temperature, minimum | -25 °C |
| Storage and transport temperature, maximum | +70 °C |
| Resistance to vibrations | 10 ... 55 Hz, amplitude 1 mm |
| Restistance to shock | 30 g / 11 ms |
| Resistant to vibration | 50 g, on sine wave oscillation |

## Electrical data

| | |
|---|---|
| Switching voltage, maximum | 250 VAC |
| Switching voltage, maximum | 250 VDC |
| Switching current, maximum | 3 A |
| Switching capacity, maximum | 120 W |
| Switching capacity, maximum | 120 VA |
| Switching element | Normally open contact (NO) |
| Bounce duration, minimum | 0.3 ms |
| Bounce duration, maximum | 0.6 ms |

## Electrical data - Digital Output

| | |
|---|---|
| Design of control elements | Reed contacts |

## Scope of delivery

| | |
|---|---|
| Scope of delivery | Actuator must be ordered separately.<br>Ex-certified screwed cable gland |

## Accessory

| | |
|---|---|
| Recommendation (actuator) | 2x BP 10<br>2x BP 15/2<br>BP 20<br>BP 31<br>BP 11<br>BP 12<br>BP 21<br>BE 20 |

## Note

| | |
|---|---|
| Note (General) | The opening and closing functions depend on the direction of actuation, the actuating magnets and the polarity of the actuating magnets.<br>When the switches and actuators come together, the colours must coincide: Red (S) to red (S) and green (N) to green (N). |

## Ordering code

Product type description:
EX-BN 20-(1)Z-3G/D

(1)

| | |
|---|---|
| **01** | 1 NC contact |
| **02** | 2 NC contact |
| **10** | 1 NO contact |
| **20** | 2 NO contacts |
| **11** | 1 NC contacts / 1 NO contact |
| **R** | 1 bistable contact |
| **2R** | 2 bistable contact |
| **11R** | 2 bistable contact NC / NO |

# Pictures

## Product picture (catalogue individual photo)




ID: kexbnf01
| 507.1 kB | .jpg | 352.778 x 181.328 mm - 1000 x 514 px - 72 dpi
| 35.7 kB | .png | 74.083 x 38.1 mm - 210 x 108 px - 72 dpi
| 68.9 kB | .jpg | 123.472 x 63.5 mm - 350 x 180 px - 72 dpi

## Dimensional drawing basic component

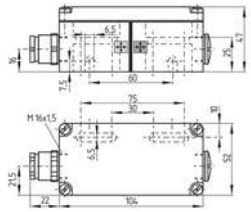

ID: 1bn20g03
| 33.4 kB | .cdr |
| 10.8 kB | .png | 74.083 x 51.858 mm - 210 x 147 px - 72 dpi
| 127.3 kB | .jpg | 352.778 x 247.297 mm - 1000 x 701 px - 72 dpi

## Diagram

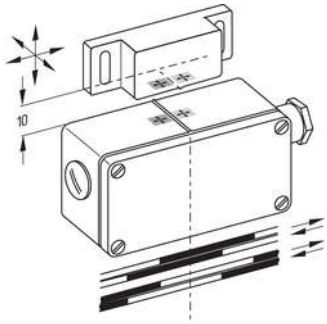


ID: 1bn20k01
| 66.1 kB | .cdr |
| 187.4 kB | .jpg | 352.778 x 349.25 mm - 1000 x 990 px - 72 dpi
| 18.5 kB | .png | 74.083 x 73.378 mm - 210 x 208 px - 72 dpi

## Characteristic curve

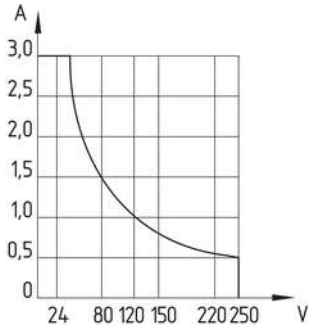


ID: kbn32d01
| 110.5 kB | .jpg | 352.425 x 371.828 mm - 999 x 1054 px - 72 dpi