efector400

E60035

ANGLE BRACKET RV,RMV

Accessories

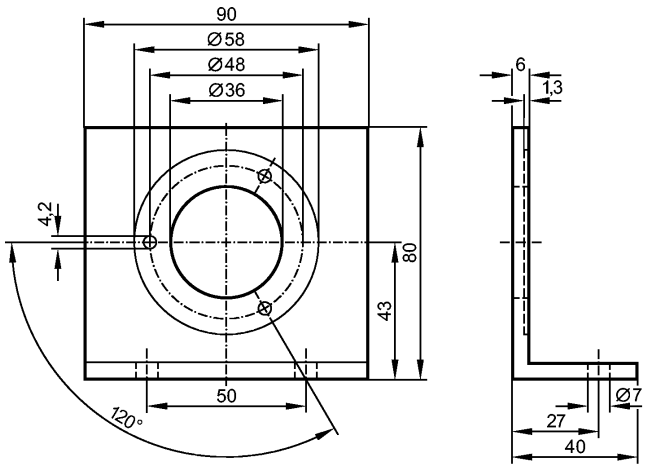

Made in Germany

Product characteristics		
Angle bracket		
Mechanical data		
Design		for encoders for types RMV, RV
Housing materials		aluminium black anodised
Weight	[kg]	0.145
Remarks		
Pack quantity	[piece]	1