E20903

Mounting set for reflectors

SYSTEM COMPONENT REFL BOLT

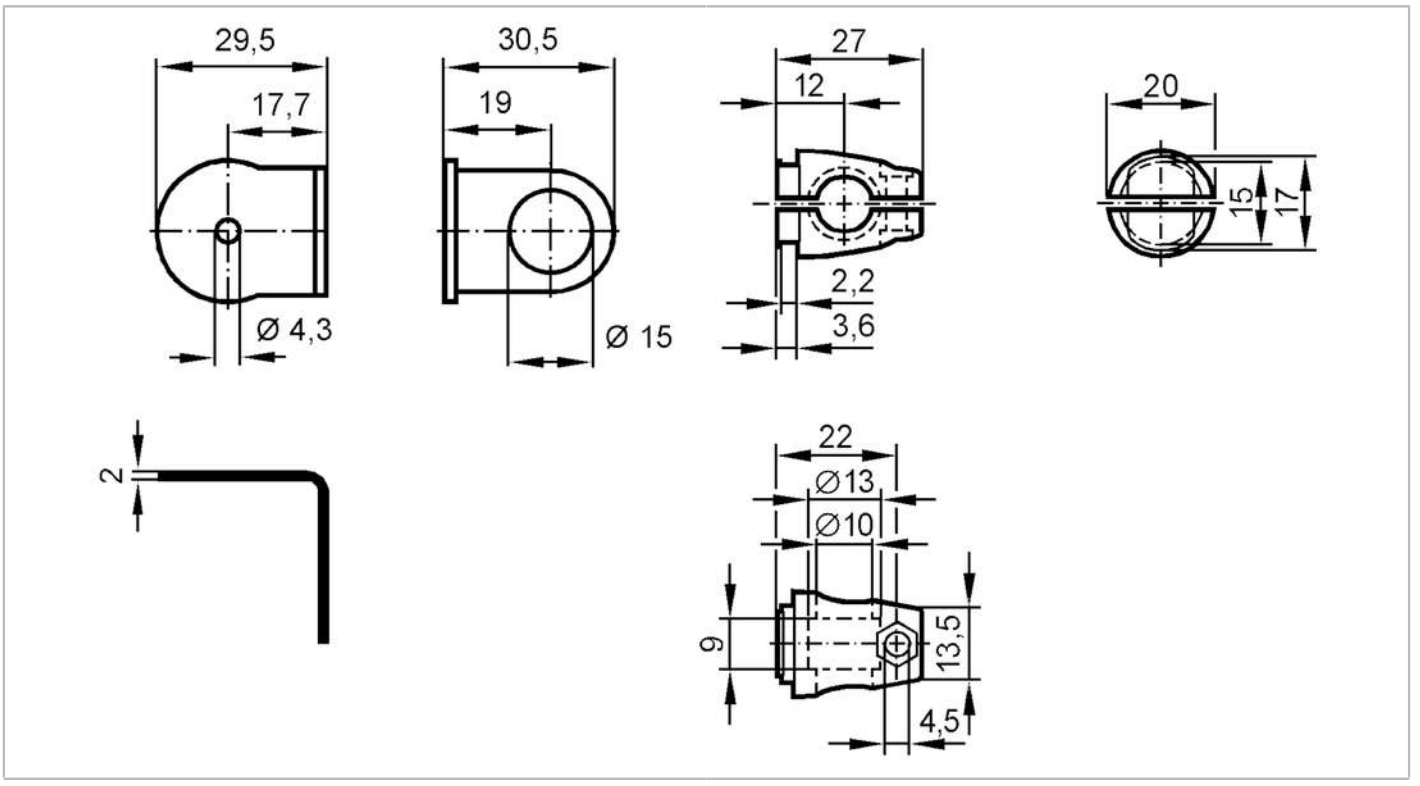

Application		
Design		clamp mounting, for reflector, Ø 25 mm
Mechanical data		
Weight	[g]	93.5
Type of mounting		free-standing; (M8)
Materials		fixture: stainless steel (1.4571/316Ti); Clamp: stainless steel (1.4408)
Accessories		
Items supplied		screw: 1 x M8 x 40
Remarks		
Pack quantity		1 pcs.