E20825

Fibre optic through-beam sensor

FE-50-V-V-M5/16/R

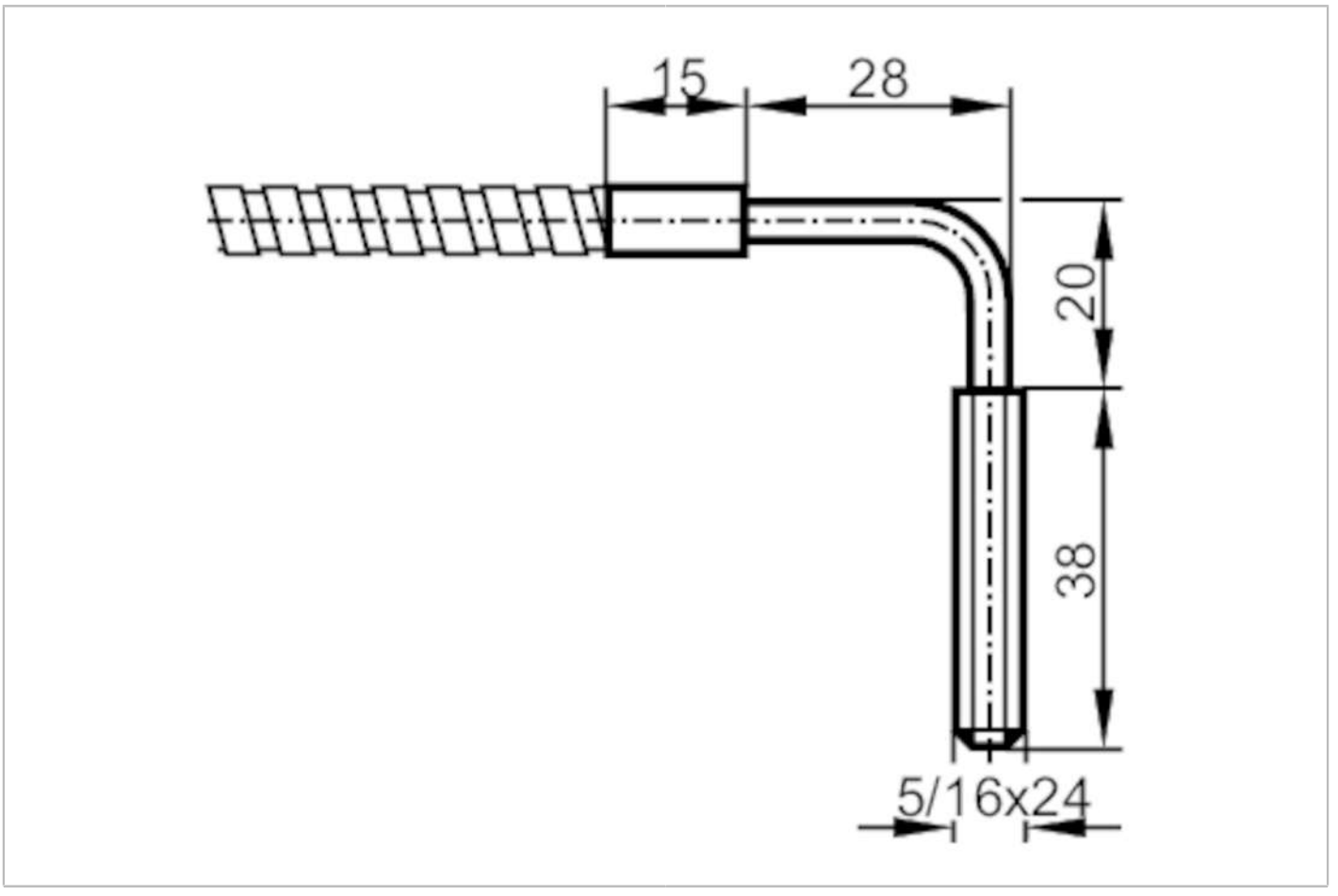

Application		
Function principle		Through-beam sensor
Detection zone		
Range with fibre-optic amplifier type		OBF; ODF; OMF
OBF		
Range of fibre optics	[mm]	1000
ODF		
Range of fibre optics	[mm]	4
OMF		
Range of fibre optics	[mm]	800
Operating conditions		
Ambient temperature	[°C]	-58...315
Mechanical data		
Weight	[g]	204
Version of sensing head		angled
Total length	[mm]	900
Min. bending radius	[mm]	19
Fibre arrangement		◉
Fibre material		glass

E20825

Fibre optic through-beam sensor

FE-50-V-V-M5/16/R

Fibre head material	stainless steel (1.4305 / 303)
Fibre sheath material	stainless steel (1.4305 / 303)
Accessories	
Items supplied	hexagon nuts: 4 x M8
	clamping rings: 2
	O-rings: 2
Remarks	
Pack quantity	1 pcs.