TABELA 1
CHART 1

MOLEX PN	WOODHEAD PN	L(mm)
1200845101	WR4J40E03C3003	300
1200848028	WR4J40E03C300	300

4 POLE

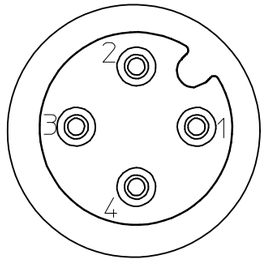

WIDOK OD STRONY DRUTOW
VIEW FROM WIRES SIDE

Pin	Kolor przew.	Wire color
1	BRAZOWY	BN
2	BIALY	WH
3	NIEBIESKI	BU
4	CZARNY	BK

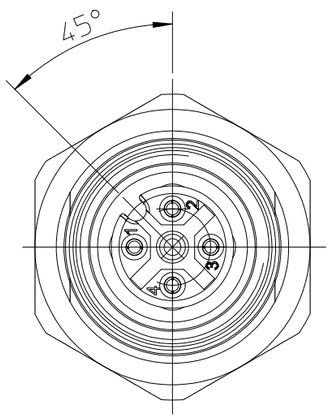

WIDOK OD STRONY CZOLA
VIEW FROM FRONT SIDE

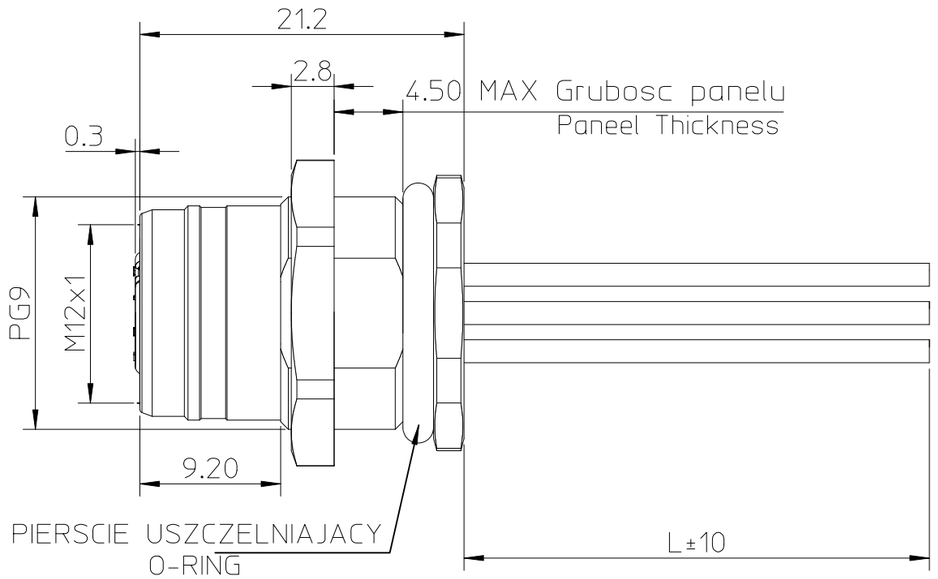

PIERSCIE USZCZELNIAJACY
O-RING

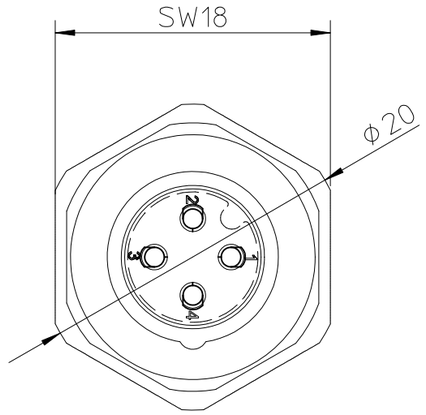

WIDOK OD STRONY WTYKANIA
VIEW FROM TERMINATION SIDE

UWAGI:
1. DLUGOSC CIECIA I SPECYFIKACJE NABIJANIA WEDLUG LISTY CIECIA.

NOTES:
1. CUTTING LENGHT AND CRIMPING SPECIFICATION SEE CUTTING LIST.

ORIGINAL RELEASE
EC NO: WEU2011-0398
DRWN:HWALCZAK 2011/02/08
CH'KD:
APPR:MDYSZEWSKA 2011/12/10
DESCRIPTION
REV A

QUALITY SYMBOLS
▼=0
▽C=0

GENERAL TOLERANCES (UNLESS SPECIFIED)

	mm	INCH
4 PLACES	± ---	± ---
3 PLACES	± ---	± ---
2 PLACES	± 0.05	± ---
1 PLACE	± 0.1	± ---

ANGULAR ± 1 °

DRAFT WHERE APPLICABLE MUST REMAIN WITHIN DIMENSIONS

DIMENSION STYLE: MM ONLY
SCALE: ---
DESIGN UNITS: METRIC
FIRST ANGLE PROJECTION

DRAWN BY: HWALCZAK DATE: 2011/02/08
CHECKED BY: DATE:
APPROVED BY: MDYSZEWSKA DATE: 2011/12/10

TITLE: M12-RECEP-4P-FEM-BACK-PG9-0.3M

molex MOLEX INCORPORATED

MATERIAL NO.: SEE CHART 1
DOCUMENT NO.: E-120084-031
SHEET NO.: 1 OF 1
SIZE: A3

THIS DRAWING CONTAINS INFORMATION THAT IS PROPRIETARY TO MOLEX INCORPORATED AND SHOULD NOT BE USED WITHOUT WRITTEN PERMISSION