# E40214

## Mounting adapter for flow sensors

SREW-IN ADAPTER 3/4"->1/2" SM

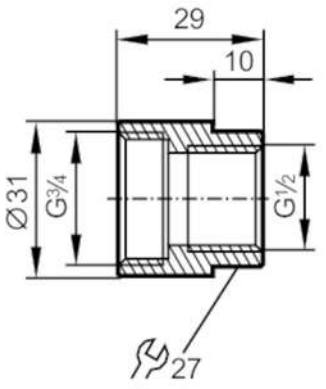


| | | |
|---|---|---|
| **Application** | | |
| Design | | for flow sensors SM7 / SU7 |
| **Tests / approvals** | | |
| Pressure Equipment Directive | | A possible classification to PED depends on the application and has to be carried out by the user / operator. |
| Pressure Equipment Directive EAC | | The adapter is intended for use in devices, machines and installations that do not fall under the categories of the technical rule TR CU 032/2013. |
| Safety instructions | | The compatibility between medium and product material has to be checked in all applications. |
| **Mechanical data** | | |
| Weight | [g] | 170.3 |
| Materials | | Adapter: stainless steel (1.4404 / 316L); Gasket: Centellen 17 x 24 x 3 mm |
| Sensor connection | | G 3/4 |
| Process connection | | threaded connection G 1/2 |
| **Accessories** | | |
| Items supplied | | O-rings: 2 |
| **Remarks** | | |
| Pack quantity | | 2 pcs. |