Part Number: **BU-70S/BU-70CS**
Description: **Alligator Clip with Screw**
3107

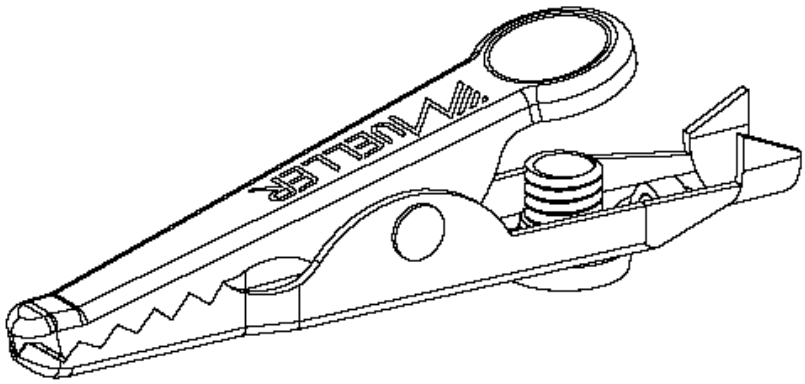

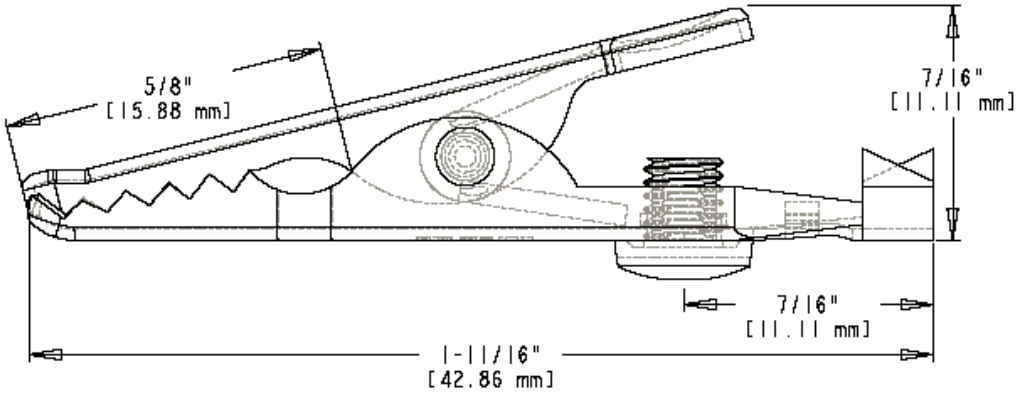

- Alligator Clip with Screw
- 6-40 screw or crimp connection
- Jaw opens 0.313” (7.9 mm) max
- Material: nickel-plated steel (BU-70S) or solid copper (BU-70CS)
- Length: 1.69” (42.86 mm)
- Federal Spec: AA59466-0017 (BU-70CS-*)
- Rating: 5 Amps (BU-70S) or 10 Amps (BU-70CS)
- RoHS Compliant

Mueller Electric Company
1625 E. 31st Street
Cleveland, Ohio 44114

ISO 9001:2000
Over 95 Years Of Innovation
www.muellerelectric.com

TEL. 800-955-2629
TEL. 216-771-5225
FAX. 216-771-3068