E12315

Terminating resistor for PROFIBUS DP

ProfiBus Terminat. Resistor

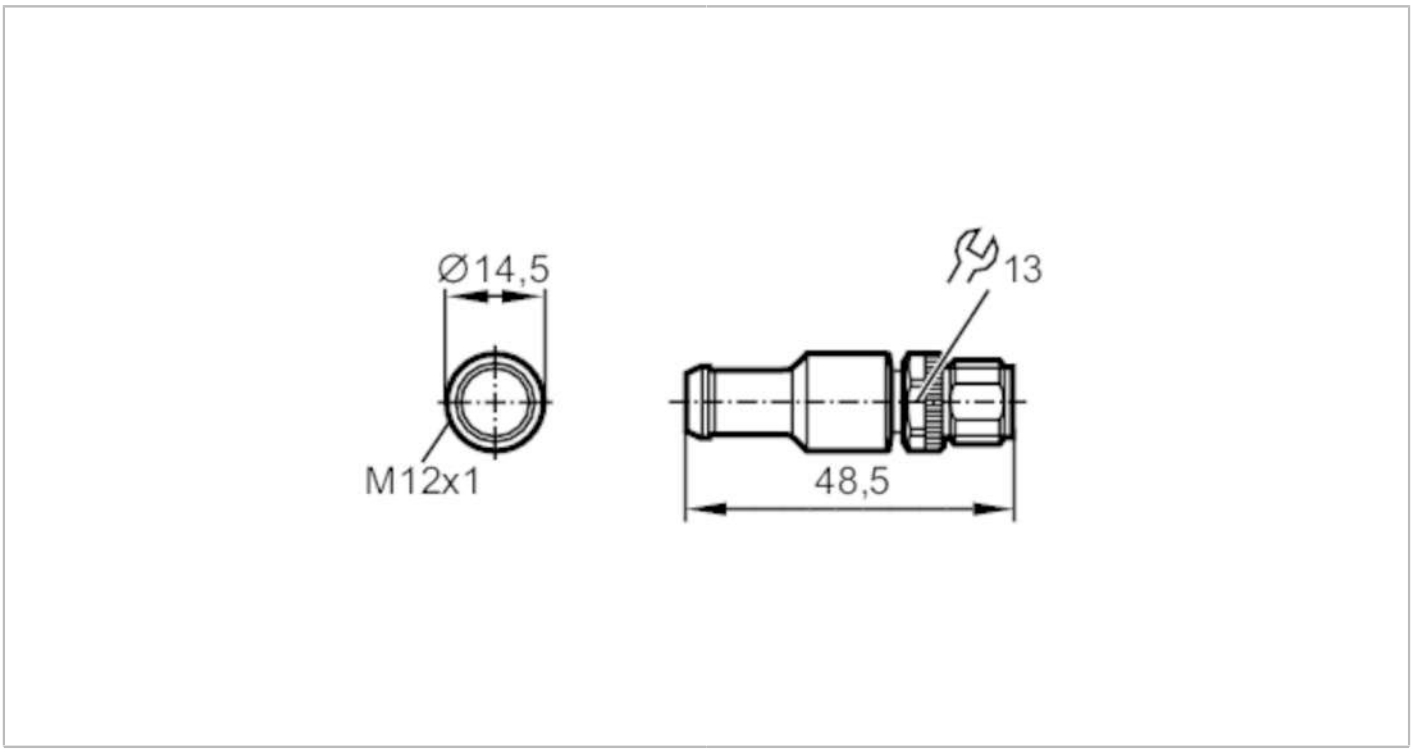

Application		
Special feature		Free from silicone; Gold-plated contacts
Free from silicone		yes
Electrical data		
Max. current load total	[A]	4; (...40 °C)
Operating conditions		
Ambient temperature	[°C]	-25...85
Protection		IP 67
Mechanical data		
Weight	[g]	9.9
Dimensions	[mm]	14.5 x 14.5 x 48.5
Materials		PUR
Moulded-body material		PUR
Material nut		brass, nickel-plated
Remarks		
Pack quantity		1 pcs.

E12315

Terminating resistor for PROFIBUS DP

ProfiBus Terminat. Resistor

Electrical connection - plug

Connector: 1 x M12, straight; coding: B; Moulded body: PUR; Locking: brass, nickel-plated; Contacts: gold-plated; Tightening torque: 0.6 Nm



Connection

