E12737

Wirable socket

ecomatPanel/Connection Set

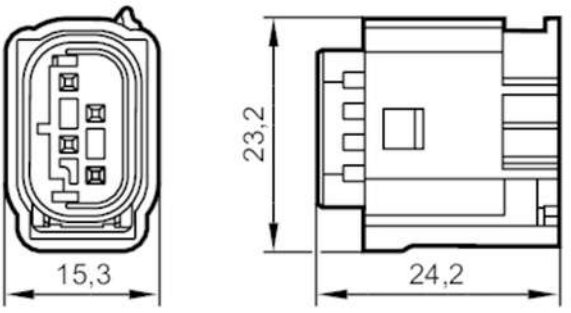

Electrical data		
Operating voltage	[V]	8...32 DC
Protection class		III
Max. current load total	[A]	4
Operating conditions		
Ambient temperature	[°C]	-40...80
Protection		IP 20; (without resistor)
Mechanical data		
Weight	[g]	10
Dimensions	[mm]	15.3 x 23.2 x 24.2
Materials		housing: PBT-GF20
Moulded-body material		PBT
Accessories		
Items supplied		120 Ohm resistor
		Crimp contacts
		protective tube
Remarks		
Pack quantity		1 pcs.

Electrical connection

5 x 0.5...0.75 mm²

Connector: AMP MQS, straight; Moulded body: PBT; Contacts: tin-plated

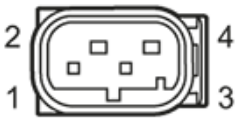

E12737

Wirable socket

ecomatPanel/Connection Set

Connection

