# BF18T4D220

FOUR-POLE CONTACTOR, IEC OPERATING CURRENT ITH (AC1) = 32A, DC COIL, 220VDC



| | | | |
|---|---|---|---|
| Product designation | | | Power contactor |
| Product type designation | | | BF18 |
| **Contact characteristics** | | | |
| Number of poles | | Nr. | 4 |
| Rated insulation voltage Ui IEC/EN | | V | 690 |
| Rated impulse withstand voltage Uimp | | kV | 6 |
| Operational frequency | | | |
| | min | Hz | 25 |
| | max | Hz | 400 |
| IEC Conventional free air thermal current Ith | | A | 32 |
| Operational current Ie | | | |
| | AC-1 (≤40°C) | A | 32 |
| | AC-1 (≤55°C) | A | 26 |
| | AC-1 (≤70°C) | A | 23 |
| | AC-3 (≤440V ≤55°C) | A | 18 |
| | AC-4 (400V) | A | 8.5 |
| Rated operational power AC-1 (T≤40°C) | | | |
| | 230V | kW | 12 |
| | 400V | kW | 21 |
| | 500V | kW | 26 |
| | 690V | kW | 36 |
| IEC max current Ie in DC1 with L/R ≤ 1ms with 1 poles in series | | | |
| | ≤24V | A | 17 |
| | 48V | A | 15 |
| | 75V | A | 15 |
| | 110V | A | 6 |
| | 220V | A | – |
| IEC max current Ie in DC1 with L/R ≤ 1ms with 2 poles in series | | | |
| | ≤24V | A | 20 |
| | 48V | A | 20 |
| | 75V | A | 20 |
| | 110V | A | 13 |
| | 220V | A | 1 |
| IEC max current Ie in DC1 with L/R ≤ 1ms with 3 poles in series | | | |
| | ≤24V | A | 22 |
| | 48V | A | 22 |
| | 75V | A | 20 |
| | 110V | A | 16 |
| | 220V | A | 11 |
| IEC max current Ie in DC1 with L/R ≤ 1ms with 4 poles in series | | | |
| | ≤24V | A | 22 |
| | 48V | A | 22 |
| | 75V | A | 20 |
| | 110V | A | 18 |
| | 220V | A | 13 |


The characteristics described in this document are subject to updates or modifications at any time. The descriptions, technical and functional information, illustrations and instructions in this brochure are purely illustrative, and are consequently not contractually binding

| | | | |
|---|---|---|---|
| IEC max current Ie in DC3-DC5 with L/R ≤ 15ms with 1 poles in series | | | |
| | ≤24V | A | 12 |
| | 48V | A | 11 |
| | 75V | A | 11 |
| | 110V | A | 2 |
| | 220V | A | – |
| IEC max current Ie in DC3-DC5 with L/R ≤ 15ms with 2 poles in series | | | |
| | ≤24V | A | 15 |
| | 48V | A | 13 |
| | 75V | A | 13 |
| | 110V | A | 8 |
| | 220V | A | 2 |
| IEC max current Ie in DC3-DC5 with L/R ≤ 15ms with 3 poles in series | | | |
| | ≤24V | A | 18 |
| | 48V | A | 18 |
| | 75V | A | 16 |
| | 110V | A | 12 |
| | 220V | A | 6 |
| IEC max current Ie in DC3-DC5 with L/R ≤ 15ms with 4 poles in series | | | |
| | ≤24V | A | 18 |
| | 48V | A | 18 |
| | 75V | A | 16 |
| | 110V | A | 13 |
| | 220V | A | 8 |
| Short-time allowable current for 10s (IEC/EN60947-1) | | A | 200 |
| Protection fuse | | | |
| | gG (IEC) | A | 32 |
| | aM (IEC) | A | 20 |
| Making capacity (RMS value) | | A | 180 |
| Breaking capacity at voltage | | | |
| | 440V | A | 144 |
| | 500V | A | 120 |
| | 690V | A | 94 |
| Resistance per pole (average value) | | mΩ | 2.5 |
| Power dissipation per pole (average value) | | | |
| | Ith | W | 2.6 |
| | AC3 | W | 0.8 |
| Tightening torque for terminals | | | |
| | min | Nm | 1.5 |
| | max | Nm | 1.8 |
| | min | lbin | 1.1 |
| | max | lbin | 1.5 |
| Tightening torque for coil terminal | | | |
| | min | Nm | 0.8 |
| | max | Nm | 1 |
| | min | lbin | 0.8 |
| | max | lbin | 0.74 |
| Max number of wires simultaneously connectable | | Nr. | 2 |
| Conductor section | | | |
| AWG/Kcmil | | | |
| | max | | 10 |
| Flexible w/o lug conductor section | | | |
| | min | mm² | 1 |


The characteristics described in this document are subject to updates or modifications at any time. The descriptions, technical and functional information, illustrations and instructions in this brochure are purely illustrative, and are consequently not contractually binding

| | | | | |
|---|---|---|---|---|
| | | max | mm² | 6 |
| Flexible c/w lug conductor section | | | | |
| | | min | mm² | 1 |
| | | max | mm² | 4 |
| Flexible with insulated spade lug conductor section | | | | |
| | | min | mm² | 1 |
| | | max | mm² | 4 |
| Power terminal protection according to IEC/EN 60529 | | | | IP20 when properly wired |
| **Mechanical features** | | | | |
| Operating position | | | | |
| | | normal | | Vertical plan |
| | | allowable | | ±30° |
| Fixing | | | | Screw / DIN rail 35mm |
| Weight | | | g | 500 |
| Conductor section | | | | |
| AWG/kcmil conductor section | | | | |
| | | max | | 10 |
| **Operations** | | | | |
| Mechanical life | | | cycles | 20000000 |
| Electrical life | | | cycles | 1600000 |
| **Safety related data** | | | | |
| Performance level B10d according to EN/ISO 13489-1 | | | | |
| | | rated load | cycles | 1600000 |
| | | mechanical load | cycles | 20000000 |
| Mirror contats according to IEC/EN 609474-4-1 | | | | yes |
| EMC compatibility | | | | yes |
| **DC coil operating** | | | | |
| DC rated control voltage | | | V | 220 |
| DC operating voltage | | | | |
| pick-up | | | | |
| | | min | %Us | 70 |
| | | max | %Us | 125 |
| drop-out | | | | |
| | | min | %Us | 10 |
| | | max | %Us | 40 |
| Average coil consumption ≤20°C | | | | |
| | | in-rush | W | 5.4 |
| | | holding | W | 5.4 |
| **Max cycles frequency** | | | | |
| Mechanical operation | | | cycles/h | 3600 |
| **Operating times** | | | | |
| Average time for Us control | | | | |
| in AC | | | | |
| | Closing NO | | | |
| | | min | ms | 8 |
| | | max | ms | 24 |
| | Opening NO | | | |
| | | min | ms | 10 |
| | | max | ms | 20 |
| | Closing NC | | | |
| | | min | ms | 14 |
| | | max | ms | 28 |


The characteristics described in this document are subject to updates or modifications at any time. The descriptions, technical and functional information, illustrations and instructions in this brochure are purely illustrative, and are consequently not contractually binding

| | | | | |
|---|---|---|---|---|
| | | Opening NC | | |
| | | | min | ms 7 |
| | | | max | ms 18 |
| | in DC | | | |
| | | Closing NO | | |
| | | | min | ms 54 |
| | | | max | ms 66 |
| | | Opening NO | | |
| | | | min | ms 14 |
| | | | max | ms 17 |
| **UL technical data** | | | | |
| Full-load current (FLA) for three-phase AC motor | | | | |
| | | | at 480V | A 14 |
| | | | at 600V | A 17 |
| Yielded mechanical performance | | | | |
| | for single-phase AC motor | | | |
| | | | 110/120V | HP 1 |
| | | | 230V | HP 3 |
| | for three-phase AC motor | | | |
| | | | 200/208V | HP 5 |
| | | | 220/230V | HP 5 |
| | | | 460/480V | HP 10 |
| | | | 575/600V | HP 15 |
| General USE | | | | |
| | Contactor | | | |
| | | | AC current | A 32 |
| Short-circuit protection fuse, 600V | | | | |
| | High fault | | | |
| | | | Short circuit current | kA 100 |
| | | | Fuse rating | A 60 |
| | | | Fuse class | J |
| | Standard fault | | | |
| | | | Short circuit current | kA 5 |
| | | | Fuse rating | A 80 |
| **Ambient conditions** | | | | |
| Temperature | | | | |
| | Operating temperature | | | |
| | | | min | °C -50 |
| | | | max | °C 70 |
| | Storage temperature | | | |
| | | | min | °C -60 |
| | | | max | °C 80 |
| Max altitude | | | | m 3000 |
| **Resistance & Protection** | | | | |
| Pollution degree | | | | 3 |
| **Dimensions** | | | | |


The characteristics described in this document are subject to updates or modifications at any time. The descriptions, technical and functional information, illustrations and instructions in this brochure are purely illustrative, and are consequently not contractually binding

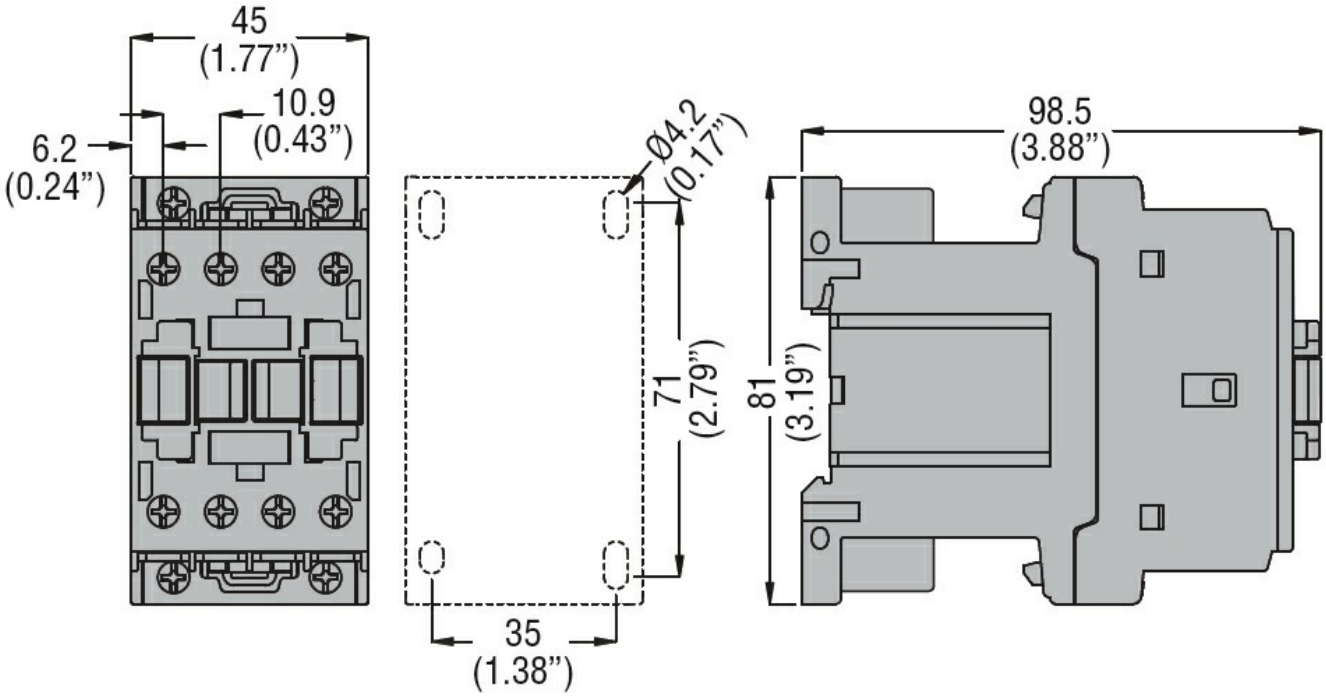


## Wiring diagrams

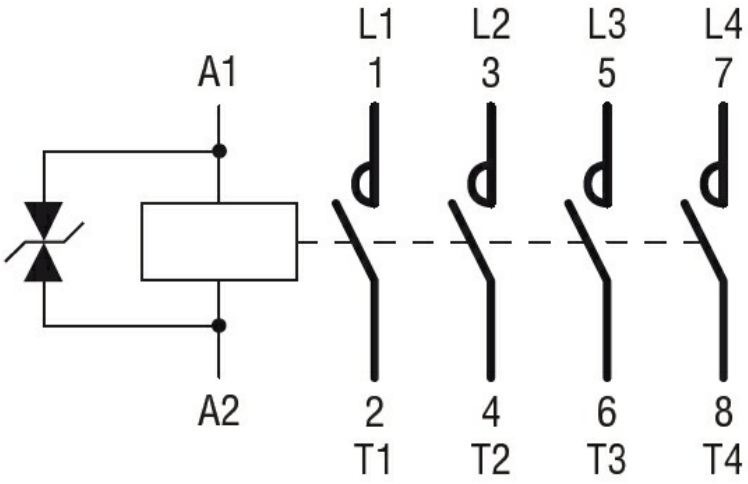


## Certifications and compliance

Compliance

| |
|---|
| CSA C22.2 n° 60947-1 |
| CSA C22.2 n° 60947-4-1 |
| IEC/EN/BS 60947-1 |
| IEC/EN/BS 60947-4-1 |
| UL 60947-1 |
| UL 60947-4-1 |

Certificates

| |
|---|
| CCC |
| cULus |
| EAC |

## ETIM classification

| | |
|---|---|
| ETIM 8.0 | EC000066 - Power contactor, AC switching |


The characteristics described in this document are subject to updates or modifications at any time. The descriptions, technical and functional information, illustrations and instructions in this brochure are purely illustrative, and are consequently not contractually binding