THE INFORMATION CONTAINED IN THIS DRAWING IS THE SOLE PROPERTY OF L-COM, INC. ANY REPRODUCTION IN PART OR WHOLE WITHOUT THE WRITTEN PERMISSION OF L-COM, INC. IS PROHIBITED.

REVISIONS

REV	DESCRIPTION	DATE	APPROVED
A	INITIAL RELEASE	6/26/07	D.FRISIELLO
B	ECN 5194: REVISE FINISH NOTE, ADD PACKAGING NOTE, NEW FORMAT	12/8/10	D.FRISIELLO
C	ECN 5492: REPLACED 4 TAPPED HOLES WITH THRU HOLES, ADD HADWARE	5/6/11	D.FRISIELLO

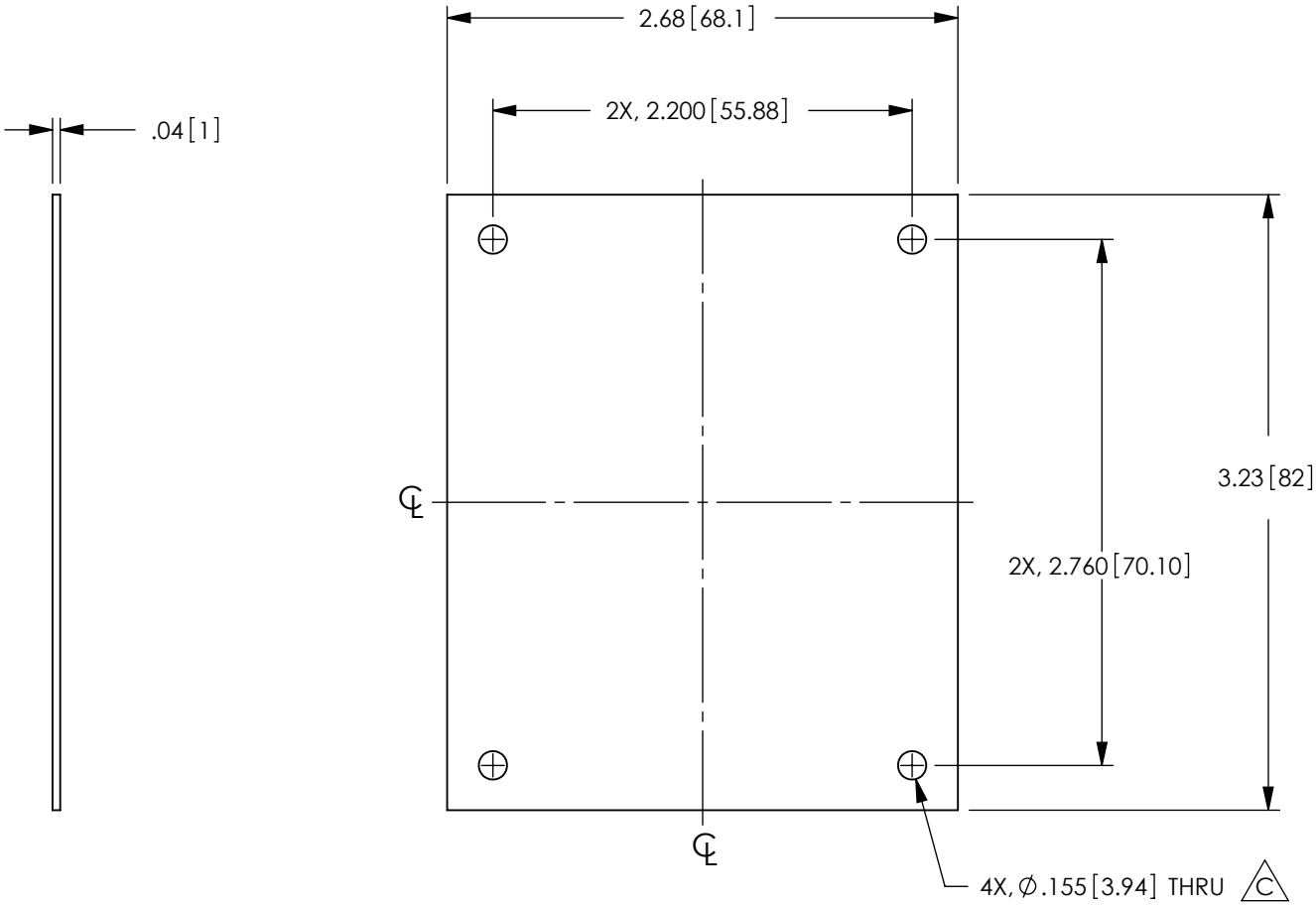

NOTES:

1. MATERIAL: .04 [1.0] THK ALUMINUM.
2. FINISH: BLACK ANODIZED.
3. (C) KIT CONTAINS 4X, #6-32 UNC-2A X 5/16 LG PAN HEAD SCREWS, AND 4X, #6-32 UNC-2B EXTERNAL STAR LOCK NUTS IN A SMALL POLY BAG.
4. COMPONENT SHALL BE INDIVIDUALLY PACKAGED IN ACCORDANCE WITH L-COM SPECIFICATION PS-0031.
5. ALL DIMENSIONS SHOWN ARE FOR REFERENCE ONLY.

RoHS Compliant ✔

UNLESS OTHERWISE SPECIFIED,
DIMENSIONS ARE IN INCHES [mm]
DIMENSIONAL TOLERANCES:
.X = ±.1
.XX = ±.01
.XXX = ±.005
ANGULAR TOLERANCES:
ALL = ± 1°
PROJECTION

APPROVALS	DATE
DRAWN BY D.FRISIELLO	6/26/07
CHECKED BY P.McNEIL	6/26/07
APPROVED BY P.McNEIL	6/26/07

CONFIGURATION DETAILS OF UNDIMENSIONED FEATURES MAY VARY

COLOR VARIATIONS MAY OCCUR

L-COM Global Connectivity
45 BEECHWOOD DRIVE
NORTH ANDOVER, MA
01845

CATEGORY: USP SUB PANEL

PRODUCT DESCRIPTION: BLANK SUB PANEL, ALUM .04

SIZE	FSCM NO.	DWG. NO.	REV.
A	43321	USP-A	C

SCALE: NONE | CAD FILE: USP-A.SLDDRW | SHEET 1 OF 1