Type: LCVR/2

Under and Over Voltage plus Time Delay

Terminal Protection to IP20



Dims: to DIN 43880
W. 17.5mm

- **Compact 17.5mm DIN rail housing**
- **Microprocessor based**
- **True R.M.S. monitoring**
- **Selectable nominal voltages to suit most popular single phase supply voltages**
- **Monitors own supply and detects if the set Under or Over voltage trip levels are exceeded**
- **Adjustments for Under and Over voltage trip levels**
- **Adjustment for Time delay**
- **Independent relay outputs - Under voltage monitoring (RLY2) / Over voltage monitoring (RLY1)**
- **2 x SPDT relay output 5A**
- **Green LED indication for supply status**
- **Individual Red LED indication for both relay statuses**

ISO 9001:2015
Cert. No. 14125771

FUNCTION DIAGRAM

Under and Over Voltage Monitoring

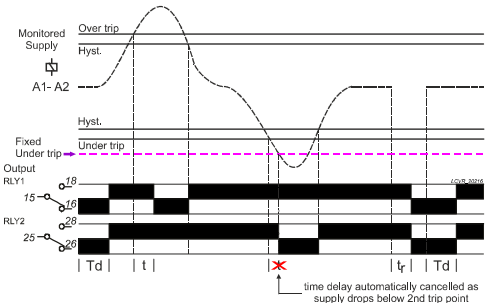

INSTALLATION AND SETTING

Installation work must be carried out by qualified personnel.

- BEFORE INSTALLATION, ISOLATE THE SUPPLY.
- Connect the unit as required. The Connection Diagram below shows a typical installation, whereby the supply to a load is being monitored by the Voltage monitoring relay. If a fault should occur (i.e. fuse blowing), the relay will de-energise and assuming control of the external Contactor, de-energise the Contactor as well.

Applying power.

- Set the "Nominal (Un)" ❹ voltage selector to match that of the voltage being monitored.
- Set the Over %" ❺ adjustment to maximum and the "Under %" ❼ adjustment to minimum. Set the "Delay (t)" ❻ to minimum.
- Apply power and the green "Power supply" ❶ LED will illuminate. Both the red "RLY1" ❷/"RLY2" ❸ LED's will illuminate and corresponding RLY1 and RLY2 relays energise after the short Power on delay (Td).
- Refer to the Troubleshooting table if the unit fails to operate correctly.

Setting the unit (with power applied).

- Set the "Over %" and the "Under %" adjustments to give the required monitoring range.
- If large supply variations are anticipated, the adjustments should be set further from the nominal voltage.
- Set the "Delay (t)" adjustment as required. (Note that the delay is only effective should the supply increase above or drop below the set trip levels. However, if during an under voltage condition the supply drops below the 2nd under voltage trip level, any set time delay is automatically cancelled and both relays de-energise immediately).

Troubleshooting.

The table below shows the status of the unit during a particular fault condition.

Supply fault	Green LED ❶	Red LED ❷	Red LED ❸	Relay RLY1	Relay RLY2
Under voltage condition (during timing)	On	On	Flashing	Energised	En for delay (t)
Under voltage condition (after timing)	On	Off	Off	Energised	De-energised
Over voltage condition (during timing)	On	Flashing	On	En for delay (t)	Energised
Over voltage condition (after timing)	On	Off	On	De-energised	Energised
Supply < fixed under trip level [2]	On	Off	Off	De-energised	De-energised

TECHNICAL SPECIFICATION

Supply/monitoring voltage Un **(A1, A2):**				
LCVR/2 (LV)*	110, 115V AC			
LCVR/2 (HV)*	220, 230, 240V AC			
Frequency range:	48 – 63Hz			
Supply variation:	LV: 70 – 150V HV: 140 – 315V AC			
Overvoltage category:	III (IEC 60664)			
Rated impulse withstand voltage:	4kV (1.2/50µS) IEC 60664			
Power consumption (max.):	2.5VA			
Monitoring mode:	Under and Over voltage			
Trip levels:				
Under [2]:	Fixed ± 2% *see below*			
Under:	75 – 95% of Un			
Over:	105 – 125% of Un			
Measuring ranges:	Nominal (Un)	Under [2]	Under	Over
LCVR/2 (LV)	**110V**	70V	83 – 105V	116 – 138V
	115V	74V	156 – 198V	218 – 260V
LCVR/2 (HV)	**220V**	140V	165 – 209V	231 – 275V
	230V	147V	173 – 219V	242 – 288V
	240V	153V	180 – 228V	252 – 300V
Hysteresis:	≈ 2% of trip level (factory set)			
Setting accuracy:	± 3%			
Repeat accuracy:	± 0.5% at constant conditions			
Immunity from micro power cuts:	<50ms			
Response time:	≈ 50ms			
Time delay (t):	0.2 – 10s (± 5%)			
	Note: actual delay (t) = adjustable delay + response time			
Power on delay (Td):	≈ 1s (worst case = Td x 2)			
Reset time:	50 – 100ms			
Power on indication:	Green LED			
Relay status indication:	Red LED x2			
Ambient temperature:	-20 to +60°C			
Relative humidity:	+95% max.			
Output **(15, 16, 18 / 25, 26, 28)**:	2 x SPDT relay			
Output rating:	AC1		250V 5A (1250VA)	
	AC15		250V 2A	
	DC1		25V 5A (125W)	
Electrical life:	≥ 150,000 ops at rated load			
Dielectric voltage:	2kV AC (rms) IEC 60947-1			
Rated impulse withstand voltage:	4kV (1.2/50µS) IEC 60664			
Housing:	Orange flame retardant UL94			
Weight:	90g			
Mounting option:	On to 35mm symmetric DIN rail to BS EN 60715 or direct surface mounting via 2 x M3.5 or 4BA screws using the black clips provided on the rear of the unit.			
Terminal conductor size	≤ 2.5mm² solid or stranded			
Terminal screw:	M2.5			
Tightening torque:	0.4Nm (3.5Lb-In) Max.			
Approvals:	Conforms to IEC.			
	UL LISTED IND. CONT. EQ. E111187			
	CE, and RoHS Compliant.			
	EMC:			
	Immunity: EN 61000-6-2 Emissions: EN 61000-6-4			

* Please state model variant when ordering

CONNECTION DIAGRAM

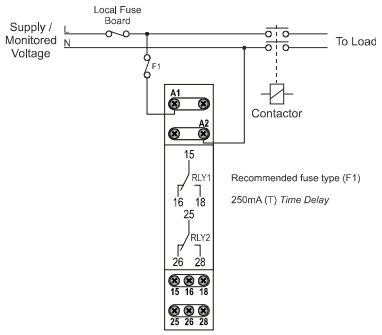

SETTING DETAILS

1. Power supply status (Green) LED
2. Relay output / Timing status (Red) LED for Over voltage tripping
3. Relay output / Timing status (Red) LED for Under voltage tripping
4. "Nominal (Un)" voltage selector
5. "Over %" trip level adjustment^
6. "Delay (t)" adjustment
7. Under %" trip level adjustment^

^scaled as % of the selected nominal voltage "Un"

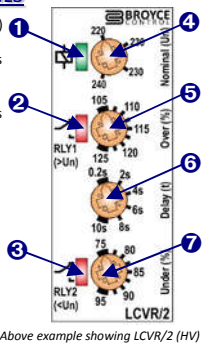

Above example showing LCVR/2 (HV)

DIMENSIONS

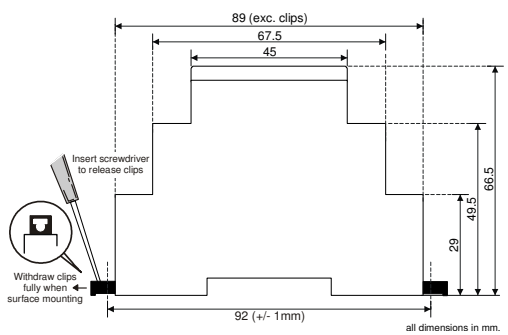

Broyce Control Ltd., Pool Street, Wolverhampton, West Midlands WV2 4HN. England
Tel: +44 (0) 1902 773746 Fax: +44 (0) 1902 420639 Email: sales@broycecontrol.com Web: www.broycecontrol.com

The Information provided in this literature is believed to be accurate (subject to change without prior notice); however, use of such information shall be entirely at the user's own risk.