Safety Relay Combination
Series SCR

Description **SCR 2-W22-2.5-S**	Article number **6075111016**

Assembly and function
(function circuit diagram)

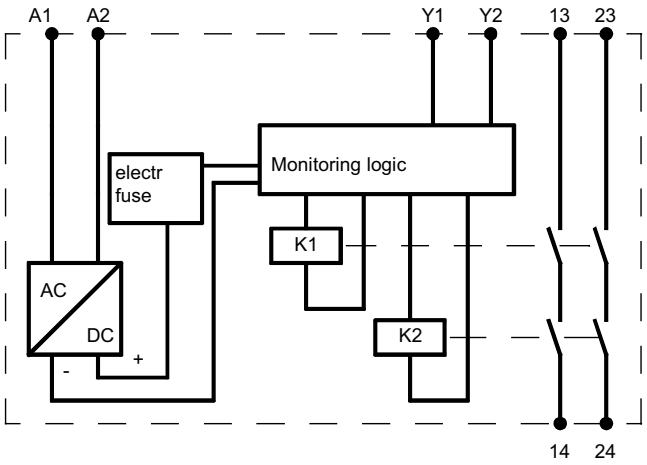



13-14, 23-24 safety circuits (normally open)

Electrical Data		
Supply voltage	U_e	24 V AC/DC
Voltage range		0,85 ...1,1 U_B
Frequency		50 ... 60 Hz
Power consumption appr.		24 V DC: 1,6 W, 24 V AC: 1,6 VA

Conductor data	
conductor connection	2,5 (2 x 0,75) mm² solid wire 2,5 (2 x 0,75) mm² strand with wire end ferrule DIN VDE 46228
Max. conductor length (input circuit)	2 x 0,5 km (single channel), 2 x 2 x 0,25 km (dual channel)
Conductor cross-section	1,5 mm²
Capacity	150 nF/km
Resistance	11,7 Ohm/km

Contact data	
Contact configuration	2 N.O. contacts
Contact type	Relay forcibly guided contacts
Contact material	$AgSnO_2$ flash gold or comparable material
Switching voltage	250 V AC, 24 V DC
Switching current	6 A
Utilization category (DIN EN 60947-5-1)	AC 15 230 V / 3 A; DC 13 24 V / 3 A
Max. switching capacity	1500 VA (ohms load)
Mechanical life	10^6 operations
Creapage and clearance distances (DIN VDE 0160)	at pollution grade 2, Voltage category 3 / 300 V
Contact protection	6,3 A fast acting or 4 A slow acting DIN VDE 0660 Teil 200
Delay on deenergisation K1	< 50 ms (DC) / < 80 ms (AC)

Mechanical data	
Enclosure material	Polyamide PA 6.6
Dimensions (W x H x D) in mm	22,5 x 114,5 x 99
Mounting	Click-fastening for DIN-Rail

Environmental data	
Operating temperature range	-25 °C ... +55 °C
Air humidity	95 %, 0 ... +50 °C
Degree of protection, terminals	IP 20 DIN VDE 0470 part 1
Degree of protection, enclosure	IP 40 DIN VDE 0470 part 1
Shock resistance N.O./N.C. contacts	10 g / 2 g, 33 Hz VDE 0160

EU Conformity	
	acc. to directive 2006/42/EG (Safety-of-Machinery-Directive)
	acc. to directive 2014/30/EU (EMC-Directive)

Approvals	
	TÜV type tested

Certifications	
Tested in accordance with	EN ISO 13849-1
Achieved level/category	Performance Level e , Kat.3
MTTFd [years]	71 “high”
DC	90 % “high”
CCF	achieved

Technical modifications and errors excepted.
The technical datasheet corresponds to the technical state as of 2019-01-31 and will not be removed in case of changes.