PK6534

Pressure switch with intuitive switch point setting

PK-010-RFG14-HCPKG/US/ /W

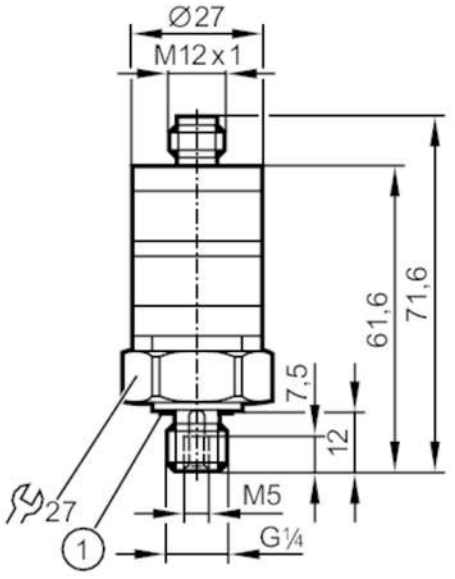

1 Sealing

Product characteristics			
Number of inputs and outputs	Number of digital outputs: 2		
Measuring range	0...10 bar	0...1000 kPa	0...1 MPa
Process connection	threaded connection G 1/4 external thread internal thread:M5		
Application			
Application	for industrial applications		
Media	liquids and gases		
Medium temperature [°C]	-25...80		
Min. bursting pressure	300 bar	30 MPa	
Pressure rating	25 bar	2.5 MPa	
Type of pressure	relative pressure		
Electrical data			
Operating voltage [V]	9.6...32 DC		
Current consumption [mA]	< 25		
Min. insulation resistance [MΩ]	100; (500 V DC)		
Protection class	III		
Reverse polarity protection	yes		
Inputs / outputs			
Number of inputs and outputs	Number of digital outputs: 2		
Outputs			
Total number of outputs	2		
Output signal	switching signal		
Electrical design	PNP		
Number of digital outputs	2		
Output function	complementary		

PK6534

Pressure switch with intuitive switch point setting

PK-010-RFG14-HCPKG/US/ /W

Max. voltage drop switching output DC	[V]	2		
Permanent current rating of switching output DC	[mA]	500		
Switching frequency DC	[Hz]	100		
Short-circuit protection		yes		
Type of short-circuit protection		pulsed		
Overload protection		yes		
Measuring/setting range				
Measuring range		0...10 bar	0...1000 kPa	0...1 MPa
Set point SP		0.5...10 bar	0.05...1 MPa	
Reset point rP		0.3...9.8 bar	0.03...0.98 MPa	
Accuracy / deviations				
Switch point accuracy [% of the final value]		< ± 2,5; (Setting accuracy)		
Repeatability [% of the final value]		< ± 0,5; (with temperature fluctuations < 10 K)		
Characteristics deviation [% of the final value]		< ± 1,5 (BFSL) / < ± 2,5 (LS); (BFSL = Best Fit Straight Line; LS = limit value setting)		
Temperature drift per 10 K		< ± 0.5		
Software / programming				
Adjustment of the switch point		setting rings		
Operating conditions				
Ambient temperature	[°C]	-25...80		
Storage temperature	[°C]	-40...100		
Protection		IP 67		
Tests / approvals				
EMC		DIN EN 61000-6-2		
		DIN EN 61000-6-3		
Shock resistance		DIN IEC 68-2-27	50 g (11 ms)	
Vibration resistance		DIN IEC 68-2-6	20 g (10...2000 Hz)	
MTTF	[years]	500		
Pressure Equipment Directive		Sound engineering practice; can be used for group 2 fluids; group 1 fluids on request		
Mechanical data				
Weight	[g]	92.5		
Housing		cylindrical		
Dimensions	[mm]	Ø 27 / L = 71.6		
Materials		PBT; PC; FKM; stainless steel (316L/1.4404)		
Materials (wetted parts)		stainless steel (316L/1.4404); FKM		
Min. pressure cycles		50 million		
Tightening torque	[Nm]	25		
Process connection		threaded connection G 1/4 external thread internal thread:M5		
Restrictor element integrated		no (can be retrofitted)		

PK6534

Pressure switch with intuitive switch point setting

PK-010-RFG14-HCPKG/US/ /W

Displays / operating elements		
Display	operation	LED, green
	switching status	LED, yellow
With scale	yes	

Remarks	
Pack quantity	1 pcs.

Electrical connection

Connector: 1 x M12; coding: A



Connection

