

Model Number

REF-H50

Reflector, rectangular 51 mm x 61 mm, mounting holes, fixing strap

Features

- Mounting holes for simple installation

Dimensions

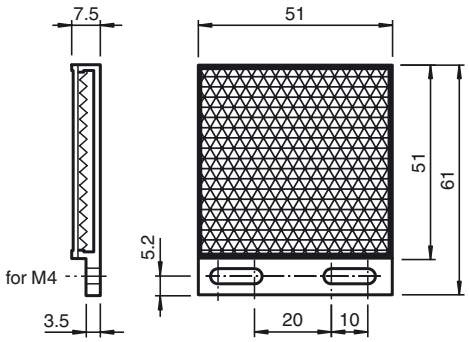

Technical data

General specifications	
Construction type	rectangular
Ambient conditions	
Ambient temperature	-20 ... 60 °C (-4 ... 140 °F)
Mechanical specifications	
Material	PMMA/ABS
Dimensions	51 mm x 61 mm x 7.5 mm
Mounting	mounting holes

Release date: 2014-06-17 08:31 Date of issue: 2014-06-17 123120_eng.xml