Brand of NTN corporation

Technical data

USEHE205

Bearing units



Grey cast housing, radial insert ball bearing with socket set screws, single lip seal

KIT CONTENT

US205G2, EHE205

VISUAL (S)

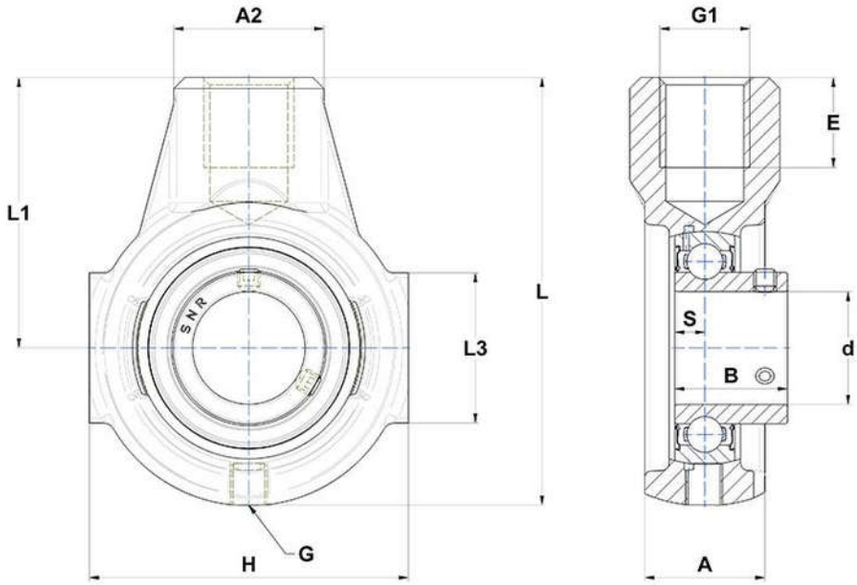

PRODUCT DEFINITION

Brand	SNR
A - Housing width	28 mm
A2	35 mm
B - Width of Inner Ring	27 mm
d - Shaft diameter	25 mm
E - Mounting hole thread depth	22 mm

NTN Europe
1 rue des Usines · BP 2017 · 74010 Annecy Cedex · France · Tel. +33 (0)4 50 65 30 00
S.A. au capital de 322 639 919 € · RCS ANNECY B 325 821 072 · Id. Fiscale : FR 48 325 821 072
SIRET 325 821 072 00015 · Code APE 2815 Z · Code NACE 28.15

PRODUCT DEFINITION	
G - Grease fitting	R1/8"
G1 - Thread size	M20
H - Housing length, width or diameter	70 mm
L - Housing length	99 mm
L1 - Distance attachment end face to bearing centerline	64 mm
L3 - Length of guidance slot/face	38 mm
S - Distance front side/bearing centre	7,5 mm

PRODUCT PERFORMANCE	
C - Dynamic load rating	14000000 mN
C0 - Static load rating	7880000 mN
Operating temperature min.	253,15 °K
Operating temperature max.	373,15 °K

OTHER FEATURES	
Mass	0,67 kg
Recommended tightening torque for set screw	5.5 N-m