DATASHEET

SPRING LOADED TOGGLE LATCH 40023 ZI



DESCRIPTION:

Available with or without padlock facility.
Interchangeable with American models
Wide positioning tolerance created by spring mechanism
Failsafe design prevents over extension of links
Maximum operating tension: 45daN
Suitable for screw fixing using 2XM5 screws for latch and 2xM5 screws for catch

Supplied with catch.

FEATURES:

- Finish: Zinc Plated
- Material: Steel
- Dimensions: 75 x 47,5 x 20,5 mm
- Depth: 20,5 mm
- Length: 75 mm
- Width: 47,5 mm

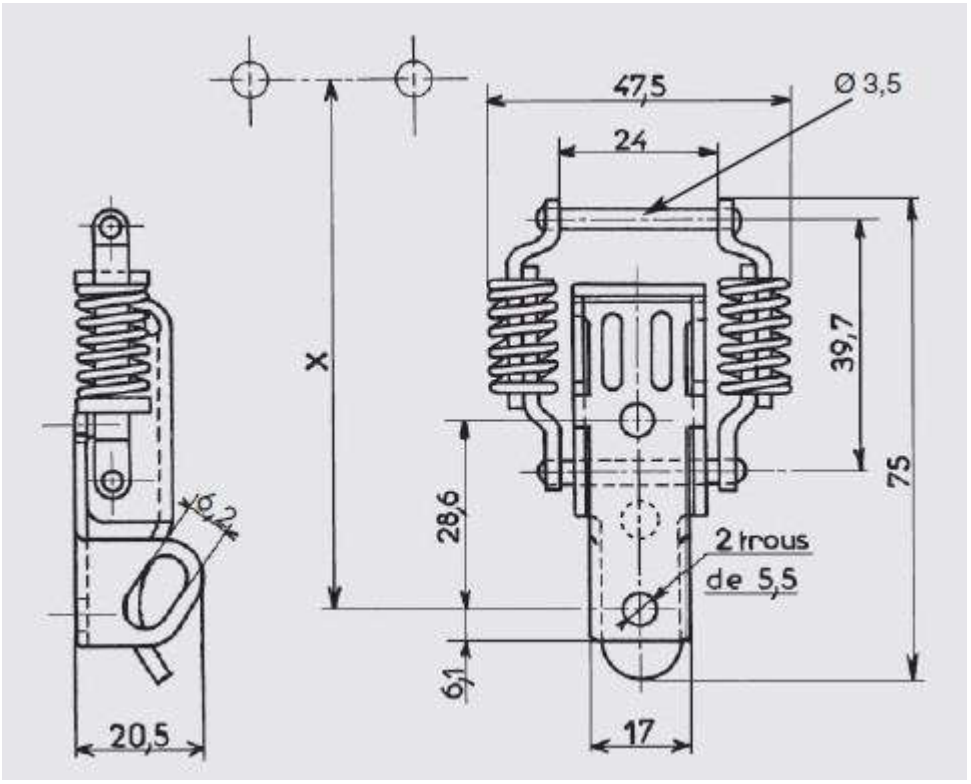
47,5
Ø 3,5
24
X
39,7
75
28,6
2 trous
de 5,5
6,1
17
20,5

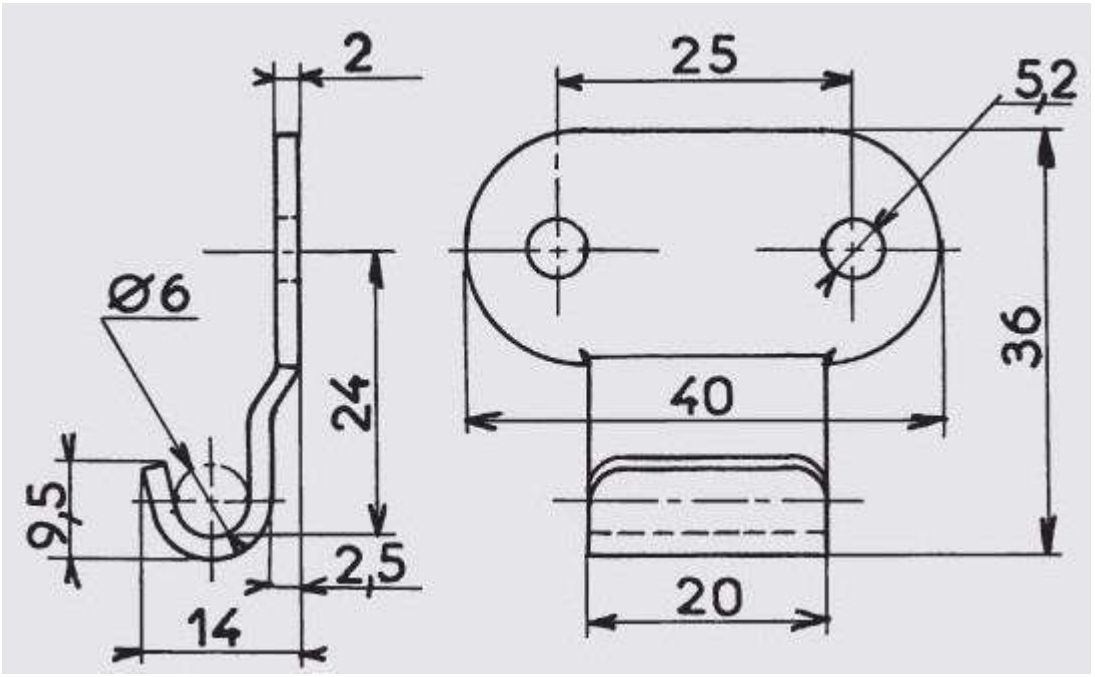
2
25
5,2
Ø6
24
36
40
9,5
2,5
20
14