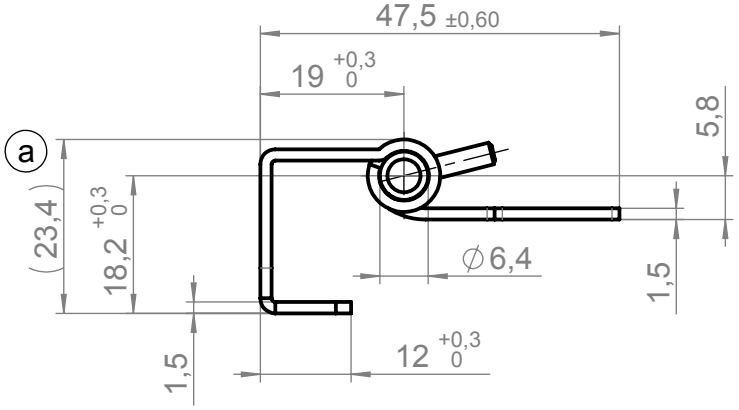

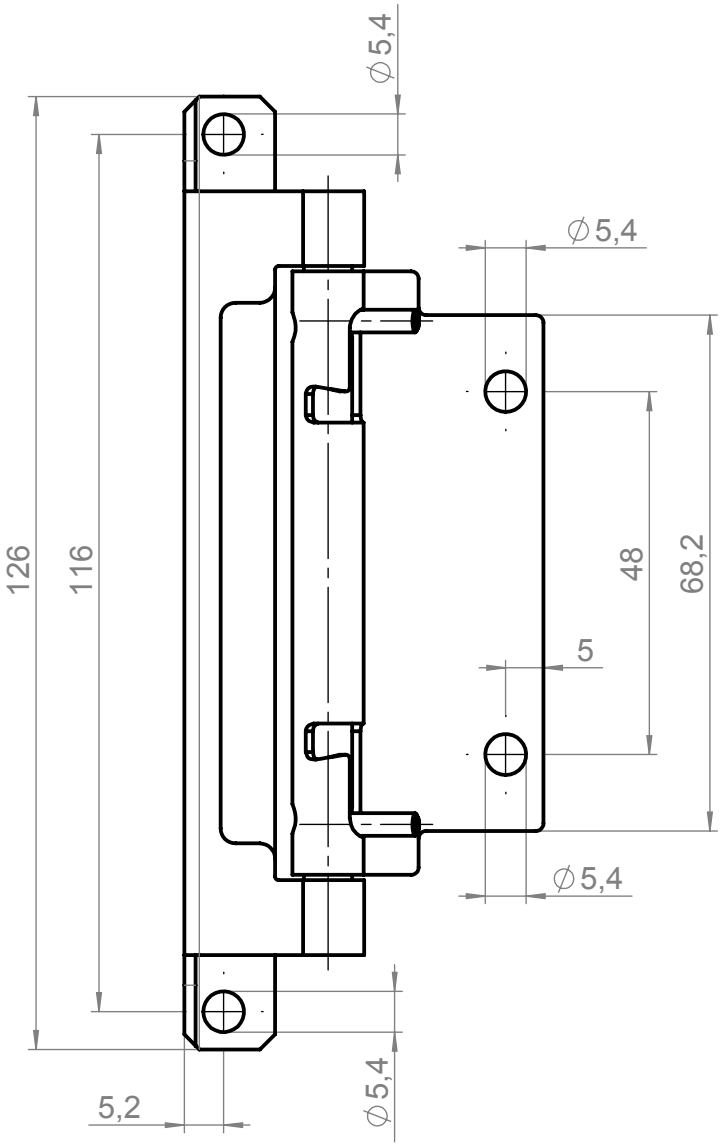

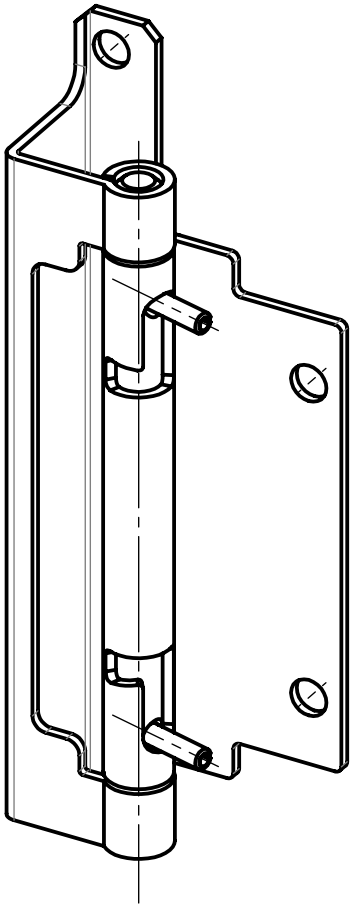

[mm]	standing part	permissible deviation	surface ISO 1302	material Edelstaht / stanless steel	STUV Mat.-Nr. ---		
				dimensions	0 g cm³		
			date	name	title		scale
		edited by	19.03.19	m.teke	Scharnier / hinge		1:1
		checked by	28.01.20	r.gottschling	mit federndem Stift / with spring-loaded pin		format A4H
		standard					
		Steinbach & Vollmann GmbH + Co. KG 42579 Heiligenhaus www.stuv.de			drawing number 05583620		page 01
a	Maß 23,4 war 23	27.01.20	Mai				from
XII index	modification	date	name	origin: 055836200000	Ers. f.:	Ers. d.:	

Redistribution and duplication of this document, recovery and exploitation
Notification of its contents is prohibited unless expressly permitted.
All rights reserved to DIN34