PTS125 Series
12 mm Tact Switches



Features/Benefits

- *THT and SMT terminations*
- *Various heights*
- *Snap fit actuator option*

Typical Applications

- *Consumer products*
- *Instrumentation*
- *Computer products*
- *Industrial*

Specification

FUNCTION: Momentary action
CONTACT ARRANGEMENT: 1 make contact SPST, N.O.
TERMINALS: PC pins for THT and G type for SMT
TRAVEL: 0.30 mm ± 0.15 mm

Mechanical

OPERATING LIFE: 200,000 cycles
OPERATING FORCE: 180 gf ± 50
250 gf ± 50

Electrical

MAX VOLTAGE: 12 VDC
MAX CURRENT: 50 mA
DIELECTRIC STRENGTH: 250 V AC (1mn)
CONTACT RESISTANCE: <100 mΩ
INSULATION RESISTANCE: >100MΩ
BOUNCE TIME: < 5 ms

NOTE: Specifications listed above are for switches with standard options.
For information on specific and custom switches, consult Customer Service Center.

Environmental

OPERATING TEMPERATURE: -20˚C to 70˚C

Process

SOLDERING: This component is suited to the following methods:
Infrared reflow soldering in accordance with IEC 61760-1 for SMT version
Wave soldering compatible with lead free soldering profile

Packaging

Soldering Style	Height	Packaging	Parts per Packaging
THT	All heights	Plastic bag	500
SMT	4.3 mm	tape & reel	900
SMT	4.3 mm with pegs	tape & reel	600
SMT	7.3 mm	tape & reel	500
SMT	7.3 mm with pegs	tape & reel	500
SMT	8.5 mm	tape & reel	500
SMT	8.5 mm with pegs	tape & reel	400
SMT	12 mm	tape & reel	250

Dimensions of reels according to EIA 481B. External diameter 330 mm.

How To Order

Our easy build-a-switch concept allows you to mix and match options to create the switch you need. To order, select desired option from each category and and place it in the appropriate box.

P T S 1 2 5 — S — [ ] — [ ] — [ ][ ] — [ ] — [ ] — -2 — L F S

Style
S Straight, top actuated

Actuator Shape
NONE Round
J Snap fit 73 height only

Actuator Force
M 180 grams
K 250 grams

Switch Height
43 4.3 mm round actuator
73 7.3 mm sqaure snap fit actuator
85 8.5 mm round actuator
12 12.0 mm round actuator with ribs

Other heights with the round actuator are available upon request. Different minimum order quantities than the stand may apply.

Pegs Option
NONE no pegs
P with pegs - only for SMT version in round and square snap fit actuator (not for 12 switch height)

Termination & Packaging
NONE THT in bags
SMTR SMT in tape & reel

RoHS, silver plated

Dimensions are shown: mm
Specifications and dimensions subject to change

THT VERSION WITH ROUND ACTUATOR H= 4.3 & 8.5 MM (other height upon request)

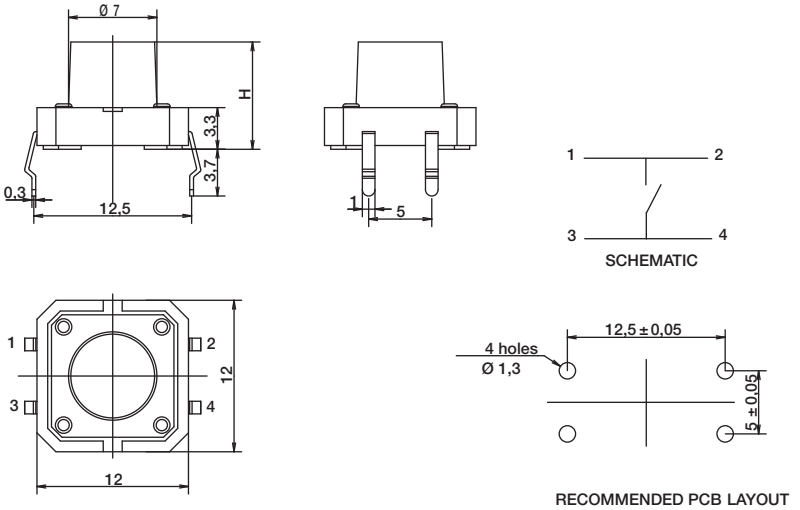

SMT VERSION WITH ROUND ACTUATOR AND PEGS H= 4.3 & 8.5 MM (other height upon request)

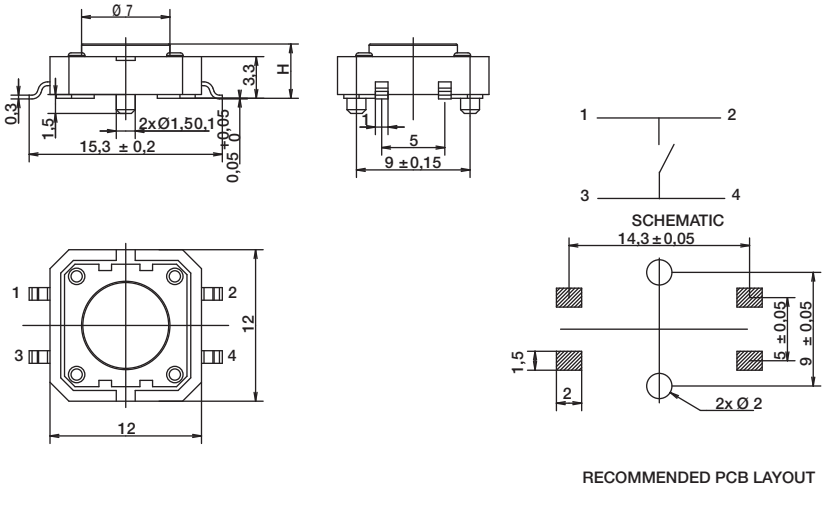

First Angle Projection

Dimensions are shown: mm
Specifications and dimensions subject to change

THT VERSION WITH SQUARE SNAP FIT ACTUATOR H= 7.3 MM

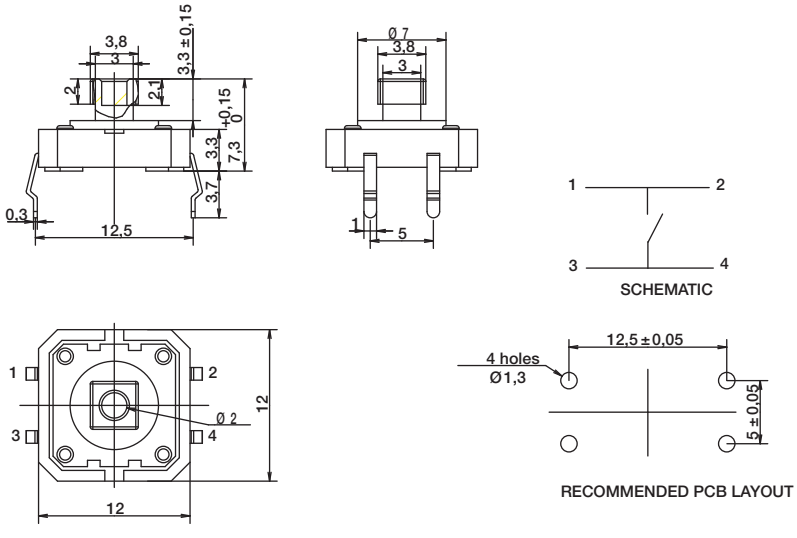

SMT VERSION WITH SQUARE SNAP FIT ACTUATOR AND PEGS H= 7.3 MM

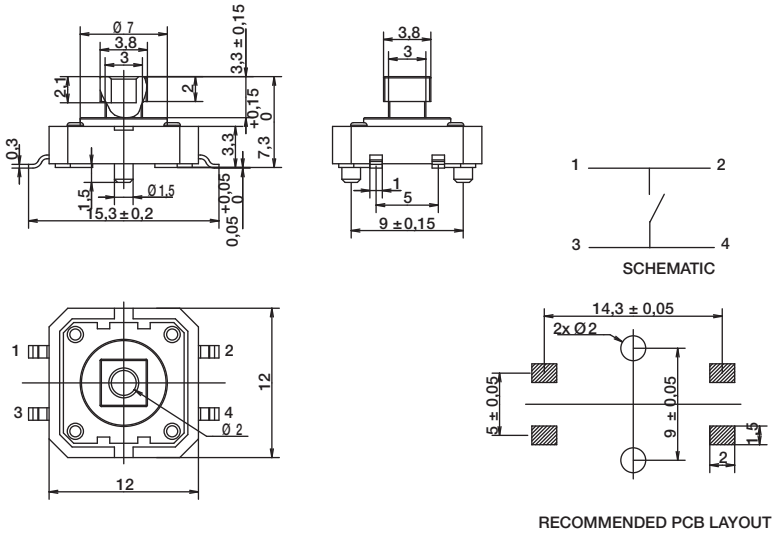

First Angle Projection

Dimensions are shown: mm
Specifications and dimensions subject to change

PTS125 Series
12 mm Tact Switches

THT VERSION WITH ROUND RIBBED ACTUATOR H= 12.0 MM

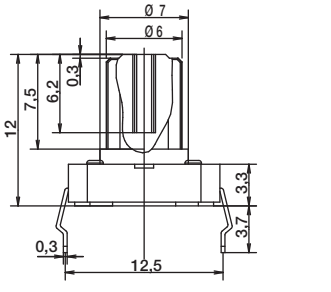

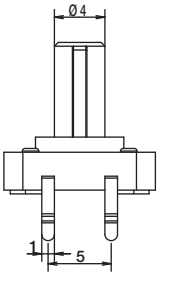

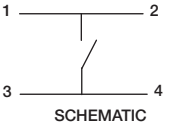

SCHEMATIC

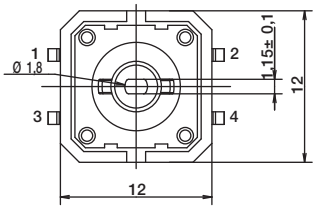

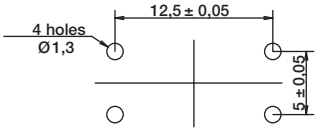

RECOMMENDED PCB LAYOUT

SMT VERSION WITH ROUND RIBBED ACTUATOR H= 12.0 MM

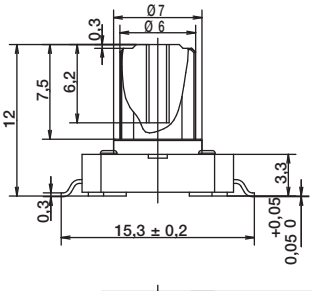

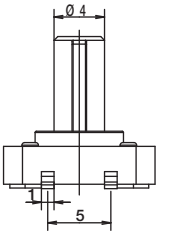

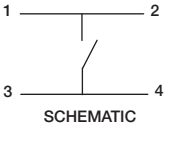

SCHEMATIC

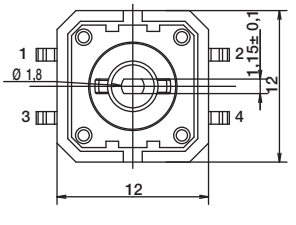

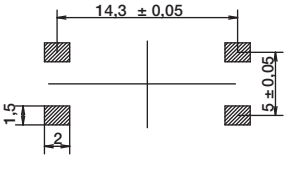

RECOMMENDED PCB LAYOUT

First Angle Projection

Dimensions are shown: mm
Specifications and dimensions subject to change