# BF115T4A57560

FOUR-POLE CONTACTOR, IEC OPERATING CURRENT ITH (AC1) = 160A, AC COIL 60HZ, 575VAC



| | | | |
|---|---|---|---|
| Product designation | | | Power contactor |
| Product type designation | | | BF115 |
| **Contact characteristics** | | | |
| Number of poles | | Nr. | 4 |
| Rated insulation voltage Ui IEC/EN | | V | 1000 |
| Rated impulse withstand voltage Uimp | | kV | 8 |
| Operational frequency | | | |
| | min | Hz | 25 |
| | max | Hz | 400 |
| IEC Conventional free air thermal current Ith | | A | 160 |
| Operational current Ie | | | |
| | AC-1 (≤40°C) | A | 160 |
| | AC-1 (≤55°C) | A | 130 |
| | AC-1 (≤70°C) | A | 115 |
| | AC-3 (≤440V ≤55°C) | A | 115 |
| | AC-4 (400V) | A | 54 |
| IEC max current Ie in DC1 with L/R ≤ 1ms with 1 poles in series | | | |
| | ≤24V | A | 160 |
| | 48V | A | 160 |
| | 75V | A | 120 |
| | 110V | A | 10 |
| | 220V | A | – |
| IEC max current Ie in DC1 with L/R ≤ 1ms with 2 poles in series | | | |
| | ≤24V | A | 160 |
| | 48V | A | 160 |
| | 75V | A | 160 |
| | 110V | A | 130 |
| | 220V | A | 14 |
| IEC max current Ie in DC1 with L/R ≤ 1ms with 3 poles in series | | | |
| | ≤24V | A | 160 |
| | 48V | A | 160 |
| | 75V | A | 160 |
| | 110V | A | 140 |
| | 220V | A | 145 |
| IEC max current Ie in DC1 with L/R ≤ 1ms with 4 poles in series | | | |
| | ≤24V | A | 160 |
| | 48V | A | 160 |
| | 75V | A | 160 |
| | 110V | A | 160 |
| | 220V | A | 160 |
| IEC max current Ie in DC3-DC5 with L/R ≤ 15ms with 1 poles in series | | | |
| | ≤24V | A | 160 |
| | 48V | A | 50 |
| | 75V | A | 40 |
| | 110V | A | 6 |


The characteristics described in this document are subject to updates or modifications at any time. The descriptions, technical and functional information, illustrations and instructions in this brochure are purely illustrative, and are consequently not contractually binding

| | | | |
|---|---|---|---|
| | 220V | A | – |
| IEC max current Ie in DC3-DC5 with L/R ≤ 15ms with 2 poles in series | | | |
| | ≤24V | A | 160 |
| | 48V | A | 72 |
| | 75V | A | 65 |
| | 110V | A | 65 |
| | 220V | A | 7 |
| IEC max current Ie in DC3-DC5 with L/R ≤ 15ms with 3 poles in series | | | |
| | ≤24V | A | 160 |
| | 48V | A | 150 |
| | 75V | A | 100 |
| | 110V | A | 100 |
| | 220V | A | 92 |
| IEC max current Ie in DC3-DC5 with L/R ≤ 15ms with 4 poles in series | | | |
| | ≤24V | A | 160 |
| | 48V | A | 120 |
| | 75V | A | 120 |
| | 110V | A | 125 |
| | 220V | A | 115 |
| Short-time allowable current for 10s (IEC/EN60947-1) | | A | 920 |
| Protection fuse | | | |
| | gG (IEC) | A | 200 |
| | aM (IEC) | A | 125 |
| Making capacity (RMS value) | | A | 1500 |
| Breaking capacity at voltage | | | |
| | 440V | A | 1200 |
| | 500V | A | 850 |
| | 690V | A | 905 |
| Resistance per pole (average value) | | mΩ | 0.45 |
| Power dissipation per pole (average value) | | | |
| | Ith | W | 11.5 |
| | AC3 | W | 6.0 |
| Tightening torque for terminals | | | |
| | min | Nm | 6 |
| | max | Nm | 7 |
| | min | lbin | 4.4 |
| | max | lbin | 5.2 |
| Tightening torque for coil terminal | | | |
| | min | Nm | 0.8 |
| | max | Nm | 1 |
| | min | lbin | 0.59 |
| | max | lbin | 0.74 |
| Conductor section | | | |
| AWG/Kcmil | | | |
| | max | | 2/0 |
| Flexible w/o lug conductor section | | | |
| | min | mm² | 1.5 |
| | max | mm² | 70 |
| Flexible c/w lug conductor section | | | |
| | min | mm² | 1.5 |
| | max | mm² | 70 |
| Power terminal protection according to IEC/EN 60529 | | | IP20 front |

## Mechanical features


The characteristics described in this document are subject to updates or modifications at any time. The descriptions, technical and functional information, illustrations and instructions in this brochure are purely illustrative, and are consequently not contractually binding

| | | | | |
|---|---|---|---|---|
| Operating position | | | | |
| | | normal | | Vertical plan |
| | | allowable | | ±30° |
| Fixing | | | | Screw / DIN rail 35mm |
| Weight | | | g | 2420 |
| Conductor section | | | | |
| | AWG/kcmil conductor section | | | |
| | | max | | 2/0 |
| **Operations** | | | | |
| Mechanical life | | | cycles | 15000000 |
| Electrical life | | | cycles | 1200000 |
| **AC coil operating** | | | | |
| Rated AC voltage at 60Hz | | | V | 575 |
| AC operating voltage | | | | |
| | of 50/60Hz coil powered at 50Hz | | | |
| | | drop-out | | |
| | | max | %Us | 55 |
| | of 60Hz coil powered at 60Hz | | | |
| | | pick-up | | |
| | | min | %Us | 80 |
| | | max | %Us | 110 |
| | | drop-out | | |
| | | min | %Us | 20 |
| | | max | %Us | 55 |
| AC average coil consumption at 20°C | | | | |
| | of 60Hz coil powered at 60Hz | | | |
| | | in-rush | VA | 300 |
| | | holding | VA | 20 |
| Dissipation at holding ≤20°C 50Hz | | | W | 2.5 |
| **Max cycles frequency** | | | | |
| Mechanical operation | | | cycles/h | 1500 |
| **Operating times** | | | | |
| Average time for Us control | | | | |
| | in AC | | | |
| | | Closing NO | | |
| | | min | ms | 16 |
| | | max | ms | 32 |
| | | Opening NO | | |
| | | min | ms | 9 |
| | | max | ms | 24 |
| **UL technical data** | | | | |
| General USE | | | | |
| | Contactor | | | |
| | | AC current | A | 165 |
| Short-circuit protection fuse, 600V | | | | |
| | High fault | | | |
| | | Short circuit current | kA | 100 |
| | | Fuse rating | A | 200 |
| | | Fuse class | | J |
| | Standard fault | | | |
| | | Short circuit current | kA | 10 |
| | | Fuse rating | A | 250 |
| | | Fuse class | | RK5 |


The characteristics described in this document are subject to updates or modifications at any time. The descriptions, technical and functional information, illustrations and instructions in this brochure are purely illustrative, and are consequently not contractually binding

# BF115T4A57560

FOUR-POLE CONTACTOR, IEC OPERATING CURRENT ITH (AC1) = 160A, AC COIL 60HZ, 575VAC

## Ambient conditions

Temperature

| | | | |
|---|---|---|---|
| Operating temperature | | | |
| | min | °C | -50 |
| | max | °C | 70 |
| Storage temperature | | | |
| | min | °C | -60 |
| | max | °C | +80 |
| Max altitude | | m | 3000 |

## Dimensions

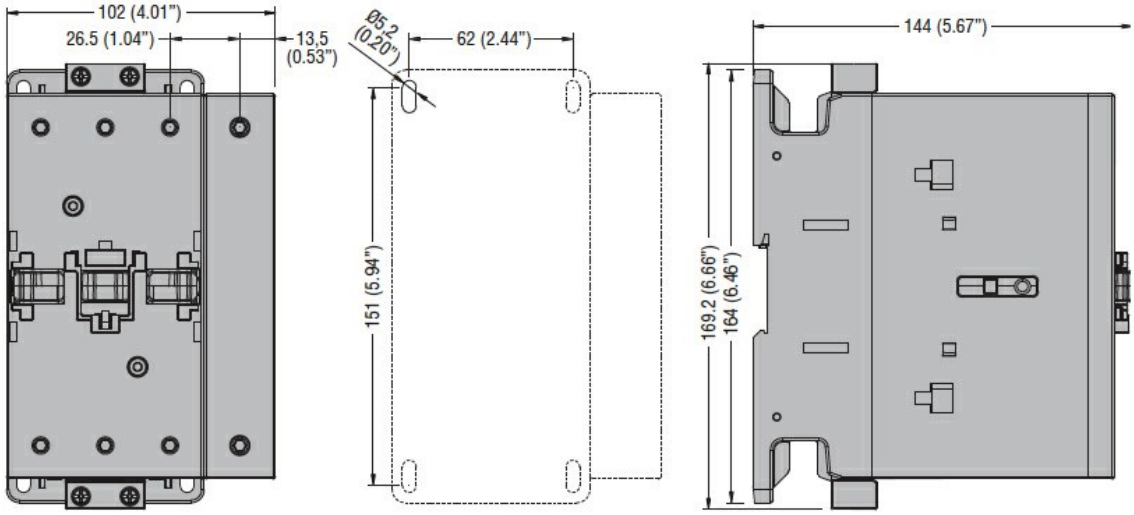


## Wiring diagrams

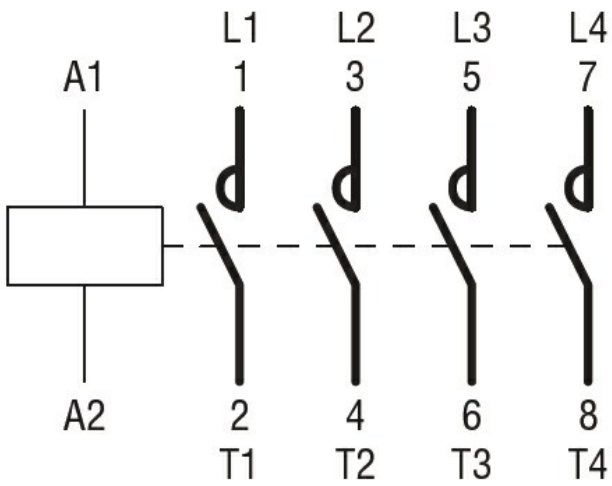


## Certifications and compliance

Compliance

| |
|---|
| CSA C22.2 n° 60947-1 |
| CSA C22.2 n° 60947-4-1 |
| IEC/EN/BS 60947-1 |
| IEC/EN/BS 60947-4-1 |
| UL 60947-1 |
| UL 60947-4-1 |

Certificates

| |
|---|
| CCC |
| cULus |


The characteristics described in this document are subject to updates or modifications at any time. The descriptions, technical and functional information, illustrations and instructions in this brochure are purely illustrative, and are consequently not contractually binding

EAC

## ETIM classification

| | |
|---|---|
| ETIM 8.0 | EC000066 - Power contactor, AC switching |


The characteristics described in this document are subject to updates or modifications at any time. The descriptions, technical and functional information, illustrations and instructions in this brochure are purely illustrative, and are consequently not contractually binding