THE INFORMATION CONTAINED IN THIS DRAWING IS THE SOLE PROPERTY OF L-COM, INC. ANY REPRODUCTION IN PART OR WHOLE WITHOUT THE WRITTEN PERMISSION OF L-COM, INC. IS PROHIBITED.

REVISIONS			
REV	DESCRIPTION	DATE	APPROVED
A	DRAWING REPLACES DMA021T-OD1	6/25/14	D.FRISIELLO

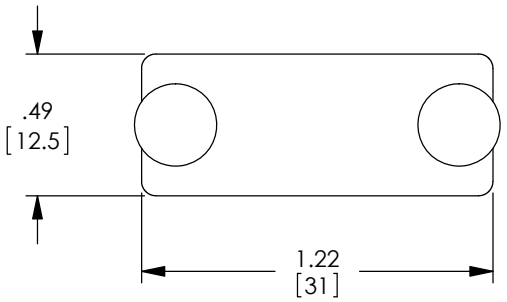

WIRING TABLE
DB9F
2
3
7
8
1
4
6
9

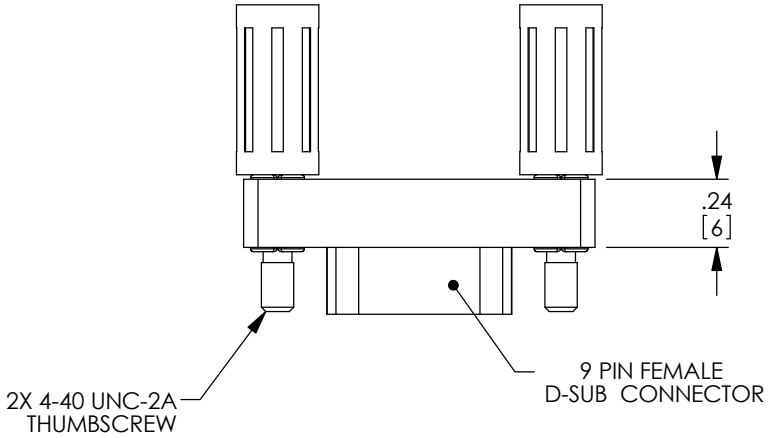

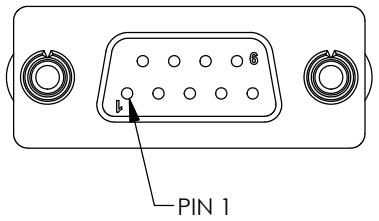

NOTES:

1. ALL- METAL HOUSING PROVIDES 100% SHIELDING.
2. CONNECTOR CONTACTS PLATING: GOLD FLASH.
3. INSULATOR MATERIAL; GLASS FILLED PBT U.L. 94V-0 RATED.
4. LOOPBACK ADAPTOR USES PINS IN WIRE DIAGRAM ONLY.
5. THUMBSCREW PLATING: NICKEL PLATED.
6. ALL OTHER METAL COMPONENTS PLATING: TIN PLATED.
7. COMPONENT SHALL BE TESTED FOR CONTINUITY.
8. COMPONENT SHALL BE INDIVIDUALLY PACKAGED IN ACCORDANCE WITH L-COM SPECIFICATION PS-0031.

REGULATORY COMPLIANCE:
CE2011/65/EU(RoHS DIRECTIVE)

UNLESS OTHERWISE SPECIFIED,
DIMENSIONS ARE IN INCHES [mm]
OVERALL CABLE LENGTH TOLERANCE:
≤12 [305] = +1 [25] / -0
>12 [305] ≤60 [1524] = +2 [51] / -0
>60 [1524] ≤120 [3048] = +4 [102] / -0
>120 [3048] ≤300 [7620] = +6 [152] / -0
>300 [7620] = +5% / -0%
ALL OTHER DIMENSIONAL TOLERANCES:
.X = ± .2 [5.08]
.XX = ± .02 [.51]
.XXX = ±.005 [.13]
PROJECTION

APPROVALS	DATE
DRAWN BY TJC	4/24/02
CHECKED BY DFP	4/25/02
APPROVED BY CM	4/25/02

CONFIGURATION DETAILS OF UNDIMENSIONED FEATURES MAY VARY

COLOR VARIATIONS MAY OCCUR

L-COM Global Connectivity
45 BEECHWOOD DRIVE
NORTH ANDOVER, MA
01845

CATEGORY
D-SUBMINIATURE

PRODUCT DESCRIPTION
ADPT, LOOPBACK TEST DB9F

SIZE	FSCM NO.	DWG. NO.	REV.
A	43321	DMA021T	A

SCALE: NONE | CAD FILE: DMA021T.SLDDRW | SHEET 1 OF 1