MSM 19

Metal Switch Medium Stroke, Switching Voltage up to 250 VAC



MSM 19 RI white

Description
- Momentary action switch available in version: Standard (ST), with Lettering (LE), from diameter 19 mm with Point Illumination (PI) and with Ring Illumination (RI)
- Assembly method: clip micro-switch into the saddle, secure switch using mounting nut
- Equipped with flat-pin plugs to permit fast connection

Standards
- DIN EN 61058-1
- UL 1054

Approvals
- Low Voltage Directive 2006/95/EC compliant; following certificate numbers apply to micro switch
- VDE / ENEC Certificate Number (Omron): 40008425, 129246, 125256
- UL / CSA File Number (Omron): E41515
- VDE / ENEC Certificate Number (Marquardt): 097550
- UL / CSA File Number (Marquardt): E41791
- KEMA / ENEC File Number (Cherry): 2089323.01
- UL / CSA File Number (Cherry): E23301

Characteristics
- Housing and actuator material: high-quality stainless steel
- Variety of design options regarding size, colour, illumination, connection or lettering
- Switching voltage from 30 VDC to 250 VAC, switching current from 0.1 A to 10 A
- optional with point or ring illumination
- IP-Protection: IP 67 from front side to contact area, Micro-Switch is available in versions IP 40 or IP 67, moving actuator is rated IP 40 to frontside
- for use in harsh environments

References
Alternative: double-pole switch: MSM DP 19
Alternative: switch with latching function: MSM LA 19; MSM LA CS 19
Alternative: switch with backlighted illumination: MSM CS 19

Weblinks
html-datasheet, General Product Information, CE declaration of conformity, RoHS, CHINA-RoHS, e-Shop, CAD-Drawings, Product News, Detailed request for product

Technical Data

Electrical Data	
Switching Function	N.O., N.C., N.O./N.C.
Number of Poles	1 pole
Supply Voltage	24 / 12 / 5 VDC Ring Illumination, Point Illumination without series resistor, LED operating data are listed in separate table
Surge Strength	4 kV MSM ST / MSM LE
Micro Switch 5 A / 125 VAC or 3 A / 250 VAC, IP40	
Contact Material	Ag
Switching Voltage	max. 125 / 250 VAC
Switching Current	max. 5 / 3 A
Rated Switching Capacity	750 W
Lifetime	0.2 million actuations at Rated Switching Capacity
Contact Resistance	< 30 mΩ
Insulation Resistance	> 100 MΩ
Duration of Bounce	< 5 ms
Micro Switch 0,1 A / 30 VDC, IP40	
Contact Material	Au
Switching Voltage	max. 30 VDC
Switching Current	max. 0.1 A
Rated Switching Capacity	3 W
Lifetime	0.2 million actuations at Rated Switching Capacity
Contact Resistance	< 50 mΩ
Insulation Resistance	> 100 MΩ
Duration of Bounce	< 5 ms
Micro Switch for Electrical Rating 10 A / 250 VAC (Protection Class IP40)	
Contact Material	Ag
Switching Voltage	max. 250 VAC
Switching Current	max. 10 A
Rated Switching Capacity	2500 W
Lifetime	0.05 million actuations at Rated Switching Capacity
Contact Resistance	< 30 mΩ
Insulation Resistance	> 100 MΩ
Duration of Bounce	< 5 ms
Micro Switch 5 A / 250 VAC, IP67	
Switching Voltage	max. 250 VAC
Switching Current	max. 5
Rated Switching Capacity	1250 W
Lifetime	0.05 million actuations at Rated Switching Capacity
Micro Switch 0,1 A / 250 VAC, IP67 - on request	
Switching Voltage	max. 250 VAC
Switching Current	max. 0.1
Rated Switching Capacity	25 W
Lifetime	0.05 million actuations at Rated Switching Capacity
Micro Switch 10 A / 250 VAC, IP67 - on request	
Switching Voltage	max. 250 VAC
Switching Current	max. 10 A
Rated Switching Capacity	2500 W
Lifetime	0.01 million actuations at Rated Switching Capacity

Mechanical Data	
Actuating Force	4.5 N
Actuating Travel	1.0 mm, for mounting diameter 16, 19, 22 mm 1.2 mm for mounting diameter 30 mm
Lifetime	1.5 million actuations
Shock Protection	IK 07 for mounting diameter 19, 22, 30 mm,, IK 06 for mounting diameter 16 mm
Tightening Torque Plastic Nut	max. 2 Nm for thread M16, 4.5 Nm for M19, 3.5 Nm for M22, 8 Nm for M30
Tightening Torque Stainless Steel Nut	max. 10 Nm for thread M16, 12 Nm for M19, 16 Nm for M22, 50 Nm for M30
Climatical Data	
Operating Temperature	-25 to +85 °C
Storage Temperature	-25 to +85 °C
IP-Protection	IP 67 Front Side Contact Area, IP 40 Front Side mechanical, IP 40 / IP 67 Rear Side Contact Area optional
Salt Spray Test (acc. to DIN 50021-SS)	24 h / 48 h / 96 h Residence Time
Material	
Housing	Stainless Steel
Actuator	Stainless Steel
Light Conductor (Point Illumination)	PC
Illuminated Ring (Ring Illumination)	PA
Gasket	NBR70
Switcher Collet	PA

Dimension

MSM 19 ST

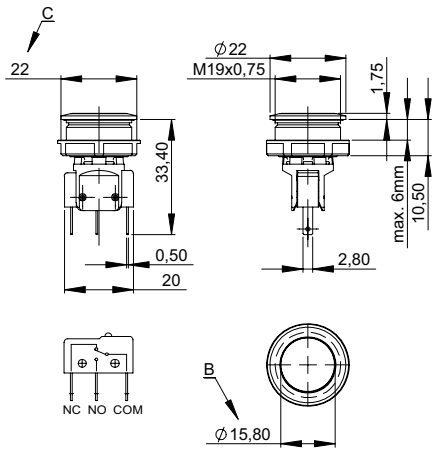

MSM 19 LE

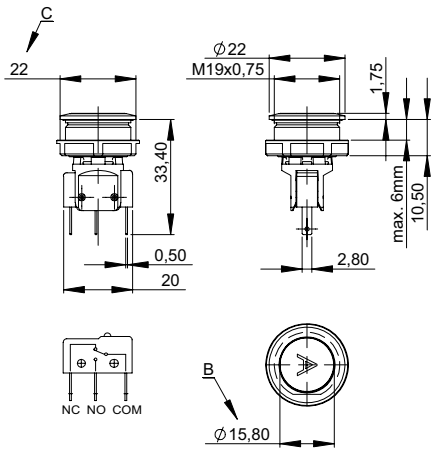

MSM 19 PI

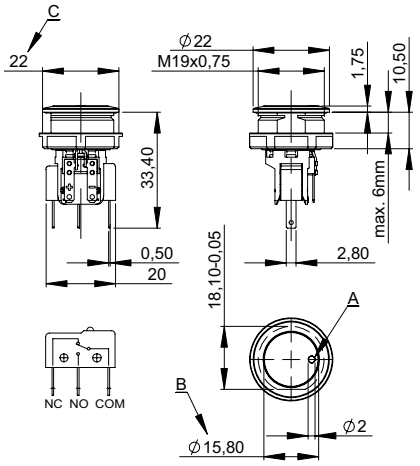

MSM 19 RI

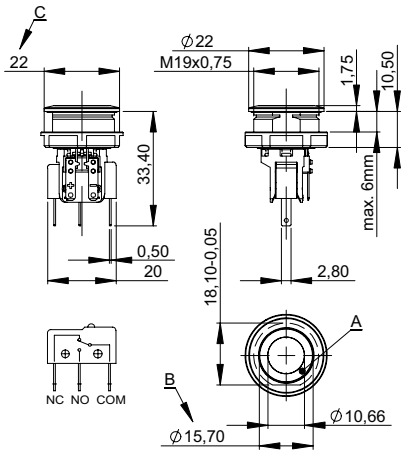

Legend
A = Illumination Area
B = Actuating Area
C = Width Across Flats
D = Nut

Tolerance Range

Actuator Tolerance Range

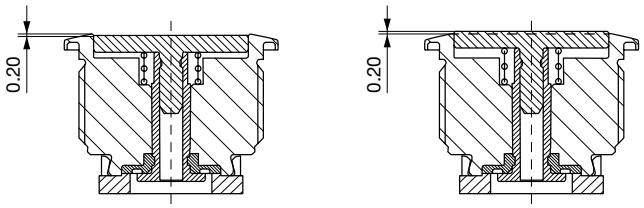

The mounting tolerance range of the actuator varies from 0.2 mm projection length and 0.2 mm short length to the housing edge. The slanting position of the actuator can range within this tolerance.

Dimension

MSM 19 ST / MSM 19 RI

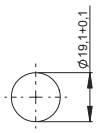

Drilling diagram

MSM 19 LE / MSM 19 PI / MSM 19 RI optional

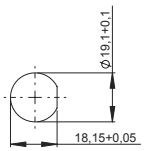

Drilling diagram

Assembly Instructions

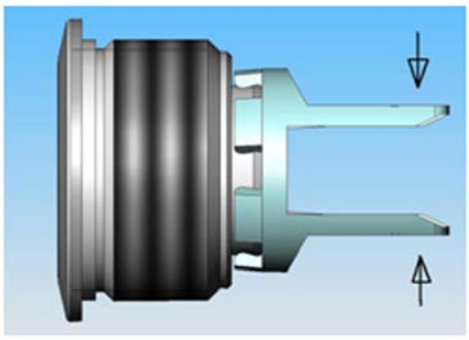

During assembly, the protruding bars of the holder should not be pressed together.

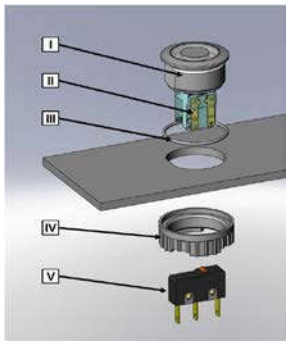

I Housing
II Flat Pin Terminal (Illumination)
III Gasket
IV Nut (Nut type see Dimensions)
V Module Switching Contact

Installation Instruction:
1.) Place the gasket accurately on the actuator housing. Then mount the actuator housing assembly into the panel.
2.) Tighten the screw nut according to the torque instructions.
3.) Clasp the module switching contact into the micro switch holder of the actuator housing.
Installation information:
1.) The power supply and the configuration of the flat pin terminals have to be installed correctly for the illumination and micro switch function.
2.) Insulate the terminals as required. Fully insulated plug-in sleeves are recommended.
3.) Installation instructions according to VDE-standard DIN VDE 0100-100 or alternatively IEC 60354 standard.

Diagrams

MSM ST / MSM LE

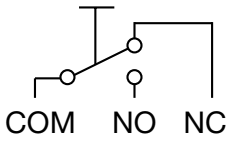

MSM PI

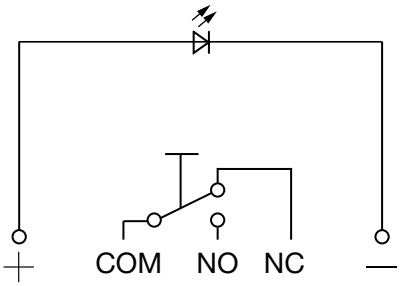

MSM RI / 5 V

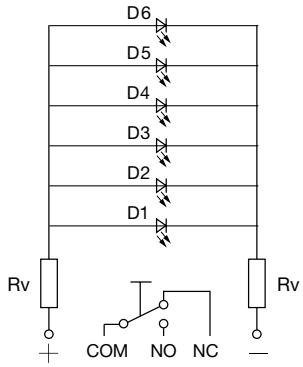

MSM RI / 12 V

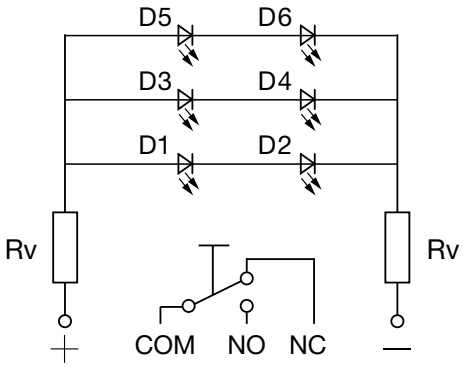

MSM RI / 24 V

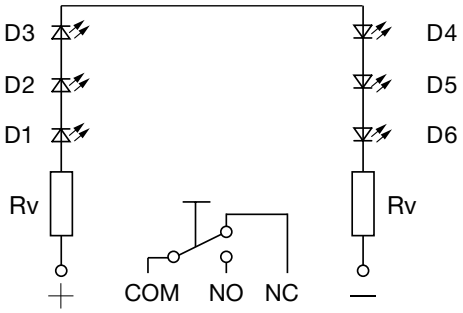

Point Illumination

Operating Data	Forward Current max.	Forward Voltage at 10 mA	Forward Voltage at 8 mA	Forward Voltage at 20 mA	Forward Voltage max.
LED red	30 mA	1.9 VDC			3.0 VDC
LED green	30 mA	2.1 VDC			3.0 VDC
LED yellow	30 mA	2.1 VDC			3.0 VDC
LED blue	20 mA		3.7 VDC		4.5 VDC
LED white	30 mA			3.6 VDC	4.0 VDC
Attention: Switches are delivered without series resistor.					

Lettering

The last three digits in the order number define the lettering:	
000	No Lettering
001-074	Standard Lettering
101-	Customized Lettering

Lettering Colour of Laser Lettering

Material	Lettering Colour	
Stainless Steel	black	Filled letters

For further Lettering details see also weblink:

Order Index Lettering

Laser Marking			
001 = **A**	021 = **U**	041 = ÷	061 = **EIN**
002 = **B**	022 = **V**	042 = ✳	062 = **AUS**
003 = **C**	023 = **W**	043 = **=**	063 = **AUF**
004 = **D**	024 = **X**	044 = #	064 = **AB**
005 = **E**	025 = **Y**	045 = ↔	065 = **ON**
006 = **F**	026 = **Z**	046 = ↕	066 = **OFF**
007 = **G**	027 = **0**	047 = →	067 = **UP**
008 = **H**	028 = **1**	048 = ←	068 = **DOWN**
009 = **I**	029 = **2**	049 = ↓	069 = **HIGH**
010 = **J**	030 = **3**	050 = ↑	070 = **LOW**
011 = **K**	031 = **4**	051 = %	071 = **ON/OFF**
012 = **L**	032 = **5**	052 = √	072 = **START**
013 = **M**	033 = **6**	053 = **CTRL**	073 = **RESET**
014 = **N**	034 = **7**	054 = **RETURN**	074 = ⏻
015 = **O**	035 = **8**	055 = **SHIFT**	075 = 💡
016 = **P**	036 = **9**	056 = **LOCK**	076 = 🔔
017 = **Q**	037 = **+**	057 = **STOP**	
018 = **R**	038 = **-**	058 = **ENTER**	
019 = **S**	039 = **.**	059 = **BACK**	
020 = **T**	040 = x	060 = **LINE**	

All Variants

Diameter	Switching Current	Switching Voltage	Illumination, LED	Housing Material, Torsion Protection	Actuator Material	Config. Code	Order Number
[mm]	[A]	[VAC/ VDC]					
19	100 mA	30 VDC	non-illuminated	Stainless Steel ,no	Stainless Steel	MSM 19 ST	1241.6621.1110000
19	5 / 3 A	125 / 250 VAC	non-illuminated	Stainless Steel ,no	Stainless Steel	MSM 19 ST	1241.6621.1120000
19	10 A	250 VAC	non-illuminated	Stainless Steel ,no	Stainless Steel	MSM 19 ST	1241.6621.1130000
19	5 A	250 VAC	non-illuminated	Stainless Steel ,no	Stainless Steel	MSM 19 ST	1241.6621.1180000
19	5 / 3 A	125 / 250 VAC	non-illuminated	Stainless Steel ,yes	Stainless Steel	MSM 19 LE	1241.6622.1120000
19	5 / 3 A	125 / 250 VAC	non-illuminated	Alu red ,yes	Stainless Steel	MSM 19 LE	1241.6622.3120000
19	5 / 3 A	125 / 250 VAC	non-illuminated	Alu red ,yes	Stainless Steel	MSM 19 LE	1241.6622.3120057
19	5 / 3 A	125 / 250 VAC	non-illuminated	Alu red ,yes	Stainless Steel	MSM 19 LE	1241.6622.3120062
19	5 / 3 A	125 / 250 VAC	non-illuminated	Alu red ,yes	Stainless Steel	MSM 19 LE	1241.6622.3120066
19	5 / 3 A	125 / 250 VAC	non-illuminated	Alu green ,yes	Stainless Steel	MSM 19 LE	1241.6622.5120000
19	5 / 3 A	125 / 250 VAC	non-illuminated	Alu green ,yes	Stainless Steel	MSM 19 LE	1241.6622.5120061
19	5 / 3 A	125 / 250 VAC	non-illuminated	Alu green ,yes	Stainless Steel	MSM 19 LE	1241.6622.5120065
19	5 / 3 A	125 / 250 VAC	non-illuminated	Alu green ,yes	Stainless Steel	MSM 19 LE	1241.6622.5120072
19	100 mA	30 VDC	Point Illumination, red	Stainless Steel ,yes	Stainless Steel	MSM 19 PI red	1241.6623.1111000
19	100 mA	30 VDC	Point Illumination, green	Stainless Steel ,yes	Stainless Steel	MSM 19 PI green	1241.6623.1112000
19	5 / 3 A	125 / 250 VAC	Point Illumination, red	Stainless Steel ,yes	Stainless Steel	MSM 19 PI red	1241.6623.1121000
19	5 / 3 A	125 / 250 VAC	Point Illumination, green	Stainless Steel ,yes	Stainless Steel	MSM 19 PI green	1241.6623.1122000
19	5 / 3 A	125 / 250 VAC	Point Illumination, blue	Stainless Steel ,yes	Stainless Steel	MSM 19 PI blue	1241.6623.1124000
19	10 A	250 VAC	Point Illumination, red	Stainless Steel ,yes	Stainless Steel	MSM 19 PI red	1241.6623.1131000
19	10 A	250 VAC	Point Illumination, green	Stainless Steel ,yes	Stainless Steel	MSM 19 PI green	1241.6623.1132000

Diameter	Switching Current	Switching Voltage	Illumination, LED	Housing Material, Torsion Protection	Actuator Material	Config. Code	Order Number	
[mm]	[A]	[VAC/ VDC]						
19	100 mA	30 VDC	Ring Illumination, red, 24 VDC	Stainless Steel ,yes	Stainless Steel	MSM 19 RI red	1241.6624.1111000	▮
19	100 mA	30 VDC	Ring Illumination, red, 5 VDC	Stainless Steel ,yes	Stainless Steel	MSM 19 RI red	1241.6624.1111000B	▮
19	100 mA	30 VDC	Ring Illumination, green, 24 VDC	Stainless Steel ,yes	Stainless Steel	MSM 19 RI green	1241.6624.1112000	▮
19	100 mA	30 VDC	Ring Illumination, yellow, 24 VDC	Stainless Steel ,yes	Stainless Steel	MSM 19 RI yellow	1241.6624.1113000	▮
19	100 mA	30 VDC	Ring Illumination, blue, 24 VDC	Stainless Steel ,yes	Stainless Steel	MSM 19 RI blue	1241.6624.1114000	
19	100 mA	30 VDC	Ring Illumination, blue, 12 VDC	Stainless Steel ,yes	Stainless Steel	MSM 19 RI blue	1241.6624.1114000E	
19	100 mA	30 VDC	Ring Illumination, blue, 24 VDC	Stainless Steel ,yes	Stainless Steel	MSM 19 RI blue	1241.6624.1114074	
19	100 mA	30 VDC	Ring Illumination, blue, 12 VDC	Stainless Steel ,yes	Stainless Steel	MSM 19 RI blue	1241.6624.1114074E	
19	5 / 3 A	125 / 250 VAC	Ring Illumination, red, 24 VDC	Stainless Steel ,yes	Stainless Steel	MSM 19 RI red	1241.6624.1121000	▮
19	5 / 3 A	125 / 250 VAC	Ring Illumination, green, 24 VDC	Stainless Steel ,yes	Stainless Steel	MSM 19 RI green	1241.6624.1122000	▮
19	5 / 3 A	125 / 250 VAC	Ring Illumination, blue, 24 VDC	Stainless Steel ,yes	Stainless Steel	MSM 19 RI blue	1241.6624.1124000	▮
19	5 / 3 A	125 / 250 VAC	Ring Illumination, white, 24 VDC	Stainless Steel ,yes	Stainless Steel	MSM 19 RI white	1241.6624.1125000	
19	10 A	250 VAC	Ring Illumination, red, 24 VDC	Stainless Steel ,yes	Stainless Steel	MSM 19 RI red	1241.6624.1131000	▮
19	10 A	250 VAC	Ring Illumination, green, 24 VDC	Stainless Steel ,yes	Stainless Steel	MSM 19 RI green	1241.6624.1132000	▮
19	10 A	250 VAC	Ring Illumination, blue, 24 VDC	Stainless Steel ,yes	Stainless Steel	MSM 19 RI blue	1241.6624.1134000	
19	5 A	250 VAC	Ring Illumination, red, 24 VDC	Stainless Steel ,yes	Stainless Steel	MSM 19 RI red	1241.6624.1181000	▮
19	5 A	250 VAC	Ring Illumination, green, 24 VDC	Stainless Steel ,yes	Stainless Steel	MSM 19 RI green	1241.6624.1182000	

Legend:
Type: MSM
CS = Ceramic Surface
ST = Standard: not lettered
LE = Lettering: lettered
AI = BL = Full Surface Backlighting: Lettering possible (see Lettering, last 3 digits)

Alu red = red anodized aluminum housing, actuator stainless steel
1241.6622.3120062 -> 3 last numbers (062) see Order Index Lettering

IP-Protection: IP 67 from front side to contact area, Micro-Switch is available in versions IP 40 or IP 67, see Technical Data Micro-Switch

Ring illuminated versions: supply voltage 24 VDC, 12 VDC (E), 5 VDC (B), (further 12 and 5 VDC versions on request)

Customer-specific versions available on request.
Special materials for use in salt and chlorinated environment on request.

The nut with gasket and micro switch are enclosed in the box.

▮ Most Popular.

Availability for all products can be searched real-time:http://www.schurter.com/en/Stock-Check/Stock-Check-SCHURTER

Packaging unit 10 in box with insert or packed in air cushion bags



- Actuating elements in ESD safe packaging
- Screw nuts and sealing rings in a bag (enclosd in the box)
- Micro switches in a bag (enclosed in the box)

Accessories

	Description
	Installation Wrench MSM 16 Installation Wrench
	Installation Wrench MSM 22 Installation wrench

12.05.2015

The specifications, descriptions and illustrations indicated in this document are based on current information. All content is subject to modifications and amendments. Information furnished is believed to be accurate and reliable. However, users should independently evaluate the suitability and test each product selected for their own applications.