# 11G48615

DELAYED AUXILIARY CONTACT 1NO+1NC (PNEUMATIC OPERATION) ON DE-ENERGISATION FOR FRONT CENTRE MOUNTING. SCREW TERMINALS, FOR BF... SERIES CONTACTORS, 15S



## Mechanical features

| | |
|---|---|
| Fixing | Front centre mounting |

## Auxiliary contact characteristics

| | |
|---|---|
| Type of contact | 1NO + 1NC |

## Dimensions

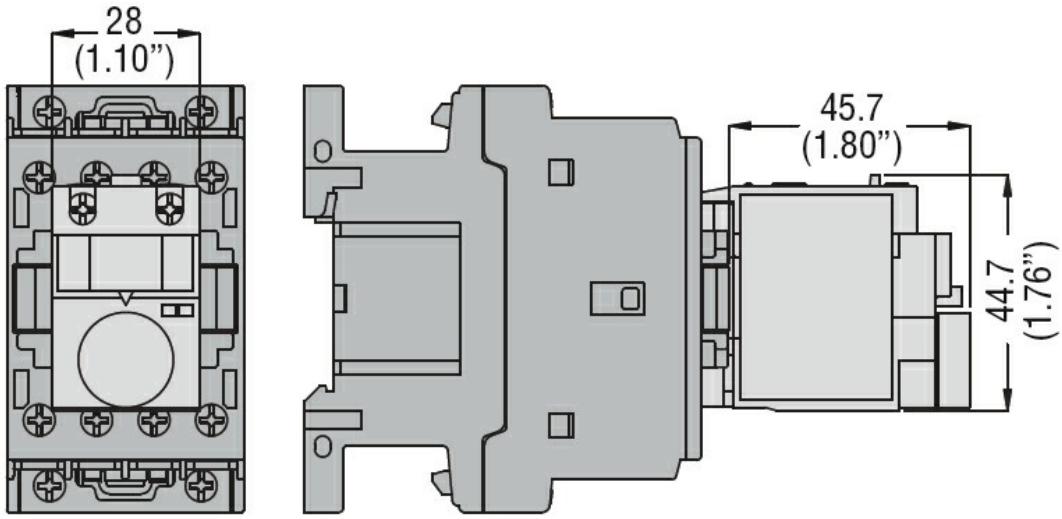


## Wiring diagrams

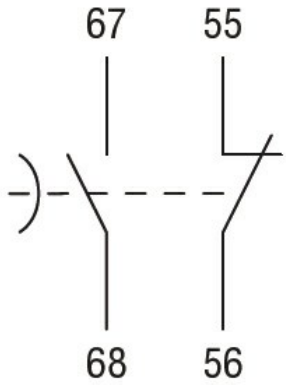


## Certifications and compliance

Compliance

| |
|---|
| CSA C22.2 n° 60947-1 |
| CSA C22.2 n° 60947-5-1 |
| IEC/EN 60947-1 |
| IEC/EN 60947-5-1 |
| UL 60947-1 |
| UL 60947-5-1 |

Certificates

CCC


The characteristics described in this document are subject to updates or modifications at any time. The descriptions, technical and functional information, illustrations and instructions in this brochure are purely illustrative, and are consequently not contractually binding

| |
|---|
| CSA |
| cURus |
| EAC |

## ETIM classification

| | |
|---|---|
| ETIM 8.0 | EC002498 - Accessories/spare parts for low-voltage switch technology |


The characteristics described in this document are subject to updates or modifications at any time. The descriptions, technical and functional information, illustrations and instructions in this brochure are purely illustrative, and are consequently not contractually binding