RM & *RMS*

Fuse disconnect switches

for industrial and high speed cylindrical fuses up to 125 A



rm_060_a_1_cat

RM
32 A



rm_066_a_1_cat

RMS
50 A



rm_062_a_1_cat

RMS
100 A

Function

RM and **RMS** are modular fuse disconnect switches for cylindrical fuses. They provide safety disconnection and protection against overloads and short-circuits in any low voltage electrical circuit.

RM: fuse disconnect switches without signalisation (for fuses without striker).

RMS: fuse disconnect switches equipped with auxiliary contacts for a worked fuse indication, fuse presence and pre-break signalisation.



rm_058_a_1



rm_063_a_1

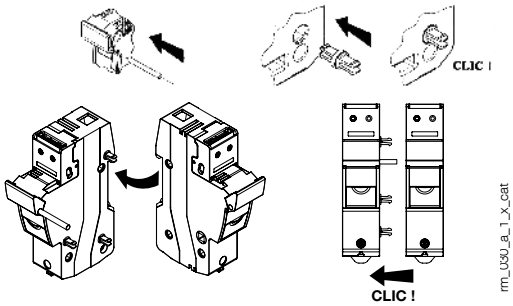

rm_050_a_1_x_cat

References

Rating (A)	32 A	50 A	100 A
Fuses size	**10 x 38**	**14 x 51**	**22 x 58**
Type	**Reference**	**Reference**	**Reference**
RM	5701 **00****	5702 **500***	5702 **500***
RMS	-	5702 **501***	5702 **501***

** Stands for an alphanumeric character depending on the rating and configuration of the switch.*

Characteristics according to IEC 60269-2

Thermal current I_{th} (20 °C)	**32 A**	**50 A**	**100 A**
Fuse size	10 x 38	14 x 51	22 x 58
Rated insulation voltage U_i (V)	690	690	690
Fuse rating (A)			
At 400 VAC	32	50	125
At 500 VAC	32	50	125
At 690 VAC		50	125
Fuse protected short-circuit withstand (kA rms prospective)			
Prospective short-circuit (kA rms)(1)	100	100	100
Operating current derating coefficient for N pole side by side			
N = 1 … 3	1	1	1
N = 4 … 6	0.8	0.8	0.8
N = 7 … 9	0.7	0.7	0.7
N ≥ 10	0.6	0.6	0.6
Operating current derating coefficient depending on temperature			
20°C	1	1	1
30°C	0.95	0.95	0.95
40°C	0.90	0.90	0.90
50°C	0.80	0.80	0.80
60°C	0.70	0.70	0.70
70°C	0.60	0.60	0.60
Connection			
Minimum Cu cable cross-section (mm^2), rigid or flexible cables	0.75	0.75	0.75
Minimum Cu cable cross-section (mm^2), rigid/flexible cables	25/16	35/25	50/35
Minimum Cu cable cross-section (mm^2), rigid/flexible cables(2)	16/10		
Tightening torque	2.5	3	5
Mechanical characteristics			
Weight of 1 P or N (kg)	0.1	0.15	0.21
Weight of 1 P + N (kg)		0.31	0.44
Weight of 3 P + N (kg)		0.70	1.10

(1) For a rated operational voltage U_e = 400 VAC.
(2) Connection for RM32 1 P + N (1 module).

Wiring requirements

Tightening torque on terminals

Fuses size	**10 x 38**	**14 x 51**	**22 x 58**
Min	2,5 Nm	2.5 Nm	3,5 Nm
	22 lb.in	22 lb.in	31 lb.in
Max	2.5 Nm	3 Nm	4 Nm
	22 lb.in	27 lb.in	35 lb.in

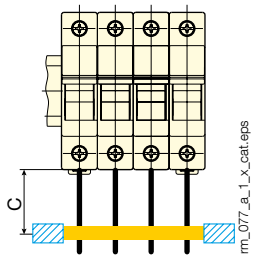

	C (mm)
Min power connections length	200
Min distance to first cable fixing support	200

Cable stripping

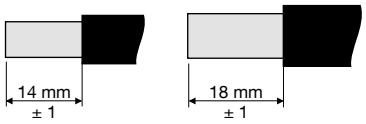

Fuses size 10 x 38 - 14 x 51

Fuses size 22 x 58

Product integration data in compliance with IEC / EN 61439-1

Below listed data is applicable to:

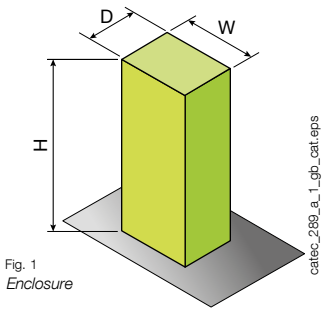

Fig. 1
Enclosure

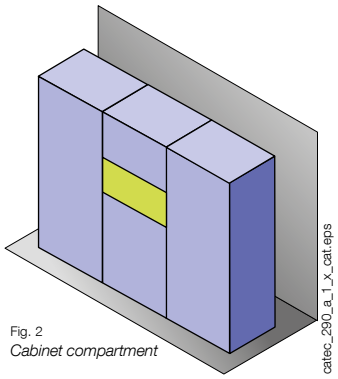

Fig. 2
Cabinet compartment

Dimensions of the Functional Unit

H (mm)	W (mm)	D (mm)
200	equipment width	100

Fuses size	10 x 38	14 x 51	22 x 58
Fuse holder			
Power dissipation per pole 0.8 I_n	0.27 W	0.52 W	1.38 W
Power dissipation per pole @ I_n	0.43 W	0.88 W	2.18 W
Connections			
Wire solid min/max. mm²	0.75/16	1.5/35	1.5/50
Wire stranded min/max. mm²	0.75/16	1.5/25	1.5/35
Associated fuse link characteristics			
Rated dissipation	3 W	5 W	9.5 W
Maximum power dissipation	4 W	6 W	12 W

Derating coefficient (Kt) due to the ambient temperature (Ta) surrounding the device

Ta	Kt
20°C	I_n
30°C	0.95 x I_n
40°C	0.90 x I_n
50°C	0.80 x I_n
60°C	0.70 x I_n
70°C	0.60 x I_n

Derating by number of poles

No. of poles	I_{max} of fuse link
1 … 4	I_n
5 … 6	0.8 x I_n
7 … 9	0.7 x I_n
≥ 10	0.6 x I_n

Document non contractuel - Réalisation : Socomec
DOC 257013 - 06/16