182.72.104.6660Rillenkugellager

Deep groove ball bearings 607 (Series 60)

main dimensions to DIN 625-1

The datasheet is only an overview of dimensions and basic load ratings of the selected product. Please always observe all the guidelines in these overview pages. Further information is given on many products under the menu item "Description". You can also order comprehensive information via the Catalogue selection system (https://www.schaeffler.de/content.schaeffler.de/en/news_media/index.jsp) or by telephone on +49 (91 32) 82 - 28 97.

d	7	mm	
D	19	mm	
B	6	mm	
D_1	15,5	mm	
d_1	10,6	mm	
$D_{a\ max}$	17	mm	
$d_{a\ min}$	9	mm	
$r_{a\ max}$	0,3	mm	
r_{min}	0,3	mm	
m	0,007	kg	Mass
C_r	2600	N	Basic dynamic load rating, radial
C_{0r}	1050	N	Basic static load rating, radial
n_G	53000	1/min	Limiting speed
n_B	35500	1/min	Reference speed
C_{ur}	53	N	Fatigue limit load, radial

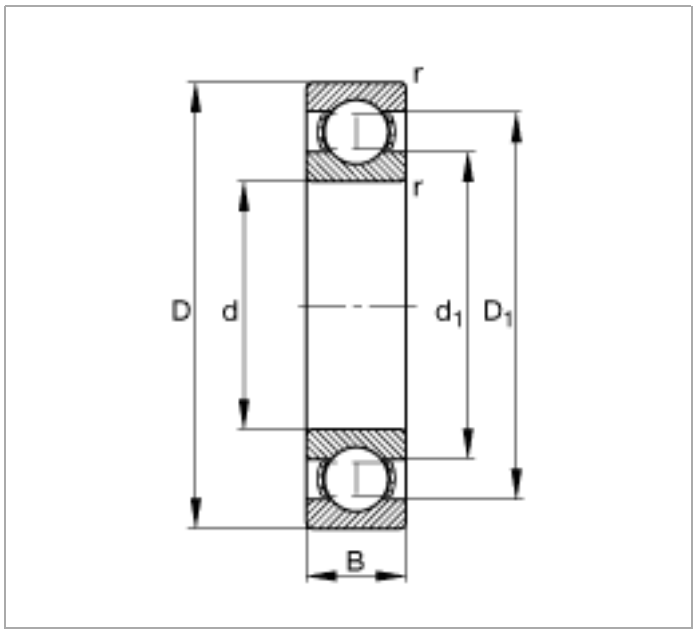
r
r
D
d
d1
D1
B

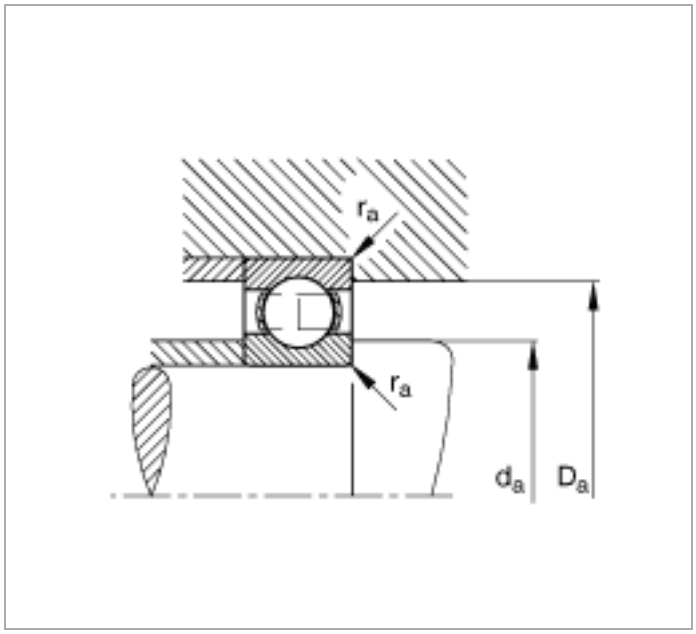
ra
ra
da
Da