

E6 Hinge

Position control · Adjustable torque

- **Hold doors open, in position**
- **User-adjusted holding torque**

Material and Finish

Leaves: Acetal
Pin: Polycarbonate
Adjustment screw & nut: Stainless steel

Performance Details

Radial load:
Large: 3110 N (700 lbf)
Medium: 1780 N (400 lbf)

Axial load:
Large: 2000 N (450 lbf)
Medium: 890 N (200 lbf)

Maximum prevailing torque of hinge:
Large: 4 N•m (35 in•lbf)
Medium: 0.8 N•m (7 in•lbf)

Operating temperature range:
-5°C (20°F) to 65°C (150°F)

Installation Notes

Mount with:
Large: M6 (1/4-20)
Medium: M4 (8-32)
(screws not supplied)

Part Number

See table

Large

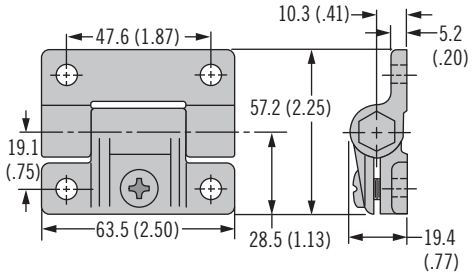

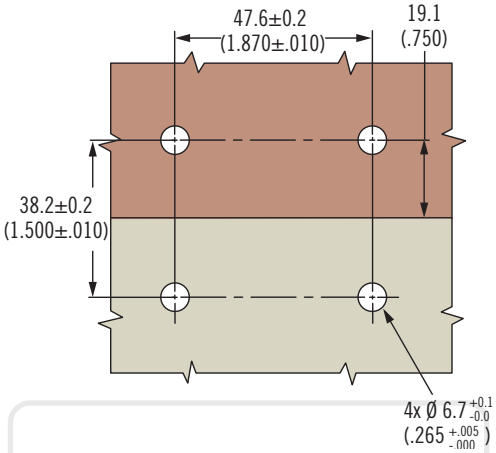

Medium

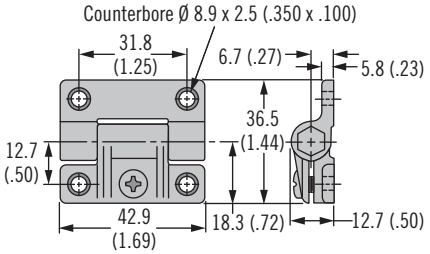

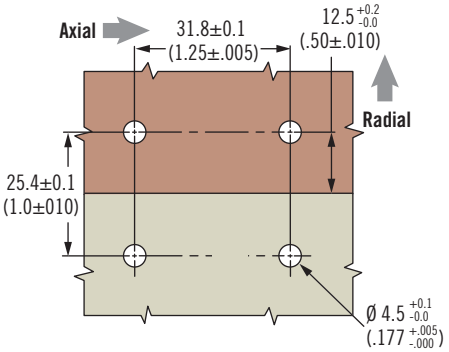

Torque Adjustment

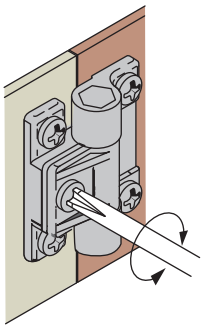

Part Number		
Color	**Large**	**Medium**
Black	E6-10-501-20	E6-10-301-20
White	E6-10-501-10	E6-10-301-10

Dimensions in millimeters (inch) unless otherwise stated

E6 Hinge

Position control · Adjustable torque



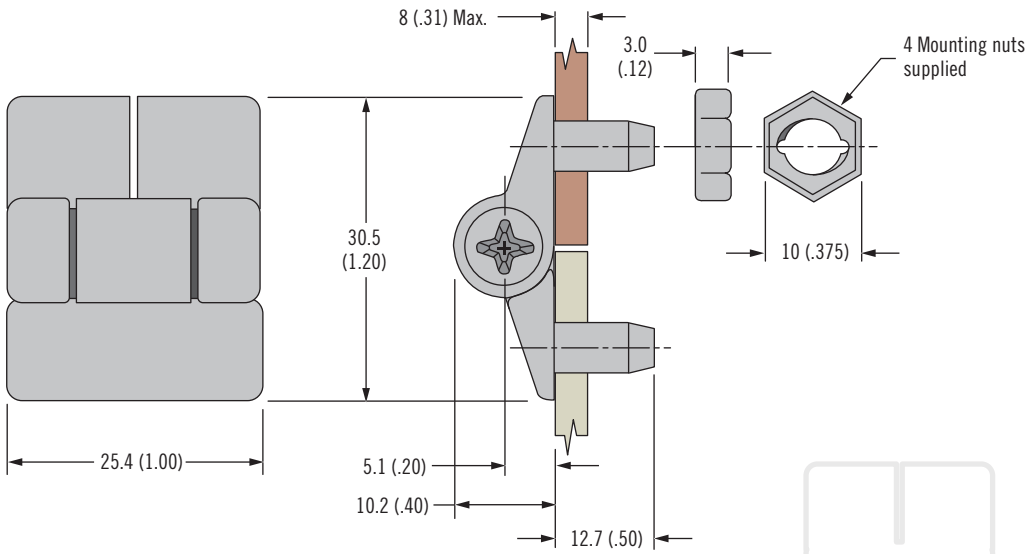

ACTUAL SIZE

- **Hold doors open, in position**
- **User-adjusted holding torque**

Material and Finish

Acetal, nylon
Mounting hardware:
Steel, zinc plated

Performance Details

Radial load:
Average ultimate load:
1150 N (260 lbf)

Axial load:
Average ultimate load:
950 N (214 lbf)

Maximum prevailing torque of hinge:
0.25 N•m (2.2 in•lbf)

Operating temperature range:
-5°C (-20°F) to 65°C (150°F)

Notes

Packaging: One hinge and four mounting nuts per bag

1. Prepare door and frame

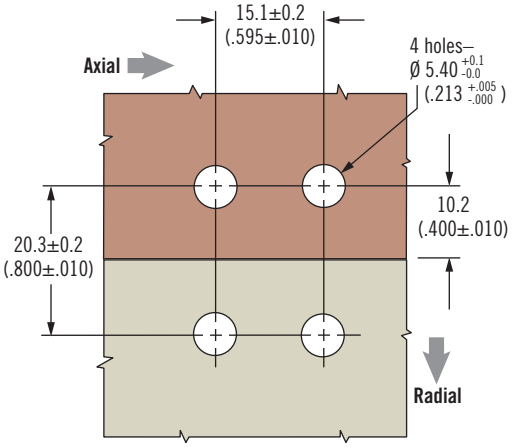

2. Mount

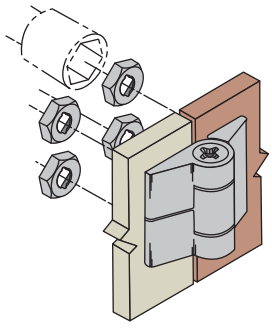

3. Adjust torque

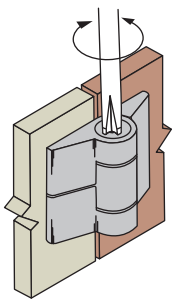

Color	Part Number
Black	E6-10-101-20
White	E6-10-101-30

Part Number

See table