MINI-BEAM® ac-Voltage Series

Self-contained photoelectric sensors

Installation Guide

Additional information on this product is immediately available online at **www.bannerengineering.com/69942**

View or download additional information, including excess gain curves, beam patterns and accessories.
For further assistance, contact a Banner Engineering Applications Engineer at (763) 544-3164 or (888) 373-6767.



Emitters with Attached Cable

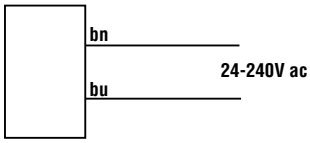

All Other Cabled Models

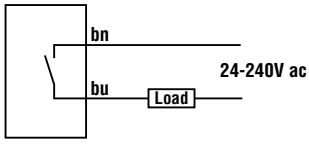

Emitters with Quick Disconnect (3-Pin Micro-Style)

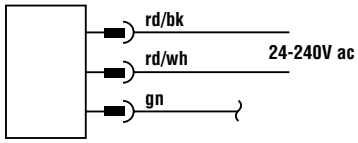

All Other Models with Quick Disconnect (3-Pin Micro-Style)

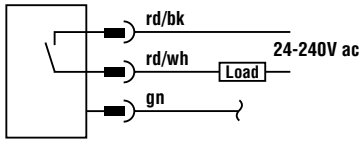

NOTE: Output Type for all models is SPST Solid-State 2-Wire.

Sensing Mode		Range	LED	Model*
	Opposed Emitter	3 m (10')	Infrared 880 nm	SMA31E
	Opposed Receiver			SM2A31R
	Opposed Emitter - Long Range	30 m (100')		SMA31EL
	Opposed Receiver - Long Range			SM2A31RL
	Opposed Emitter Clear Plastic Detection	0 to 300 mm (0 to 12") Actual range varies, depending upon the light transmission properties of the plastic material being sensed.	Visible Red 650 nm	SMA31EPD
	Opposed Receiver Clear Plastic Detection			SM2A31RPD
	Non-Polarized Retroreflective	5 m (15')		SM2A312LV
P	Polarized Retroreflective	50 mm to 2 m (2" to 7')		SM2A312LVAG
P	Extended-Range Polarized Retroreflective	10 mm to 3 m (0.4" to 10')		SM2A312LP
	Diffuse	380 mm (15")	Infrared 880 nm	SM2A312D
		300 mm (12")		SM2A312DBZ
	Divergent Diffuse	130 mm (5")		SM2A312W
	Convergent	16 mm (0.65") Focus	Infrared 880 nm	SM2A312C
		43 mm (1.7") Focus		SM2A312C2
		16 mm (0.65") Focus	Visible Red 650 nm	SM2A312CV
		43 mm (1.7") Focus		SM2A312CV2
		16 mm (0.65") Focus	Visible Green 625 nm	SM2A312CVG
	Glass Fiber Optic	Range varies, depending on sensing mode and fiber optics used.	Infrared 880 nm	SM2A312F
			Visible Red 650 nm	SM2A312FV
	Plastic Fiber Optic			SM2A312FP

*Standard 2 m (6.5') cable models are listed.

- **9 m (30') cable:** add suffix "W/30" (e.g., **SMA31E W/30**).
- **3-pin Micro-style QD models:** add suffix **"QD"** (e.g., **SMA31EQD**).

WARNING . . . Not To Be Used for Personnel Protection

Never use these products as sensing devices for personnel protection. Doing so could lead to serious injury or death.

These sensors do NOT include the self-checking redundant circuitry necessary to allow their use in personnel safety applications. A sensor failure or malfunction can cause either an energized or de-energized sensor output condition. Consult your current Banner Safety Products catalog for safety products which meet OSHA, ANSI and IEC standards for personnel protection.

Dimensions

Models with suffixes E, EL, EPD, R, RL, RPD, LV, LVAG, LP, D, C, C2, CV, CV2, and CVG

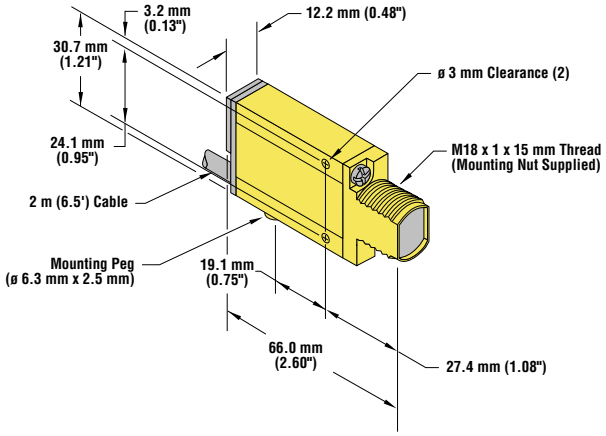

Models with suffix DBZ and W

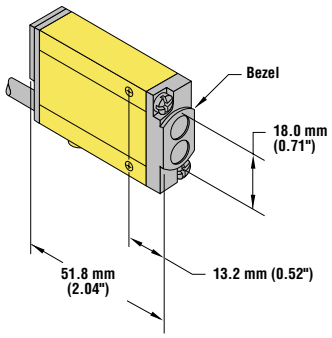

Models with suffix FP

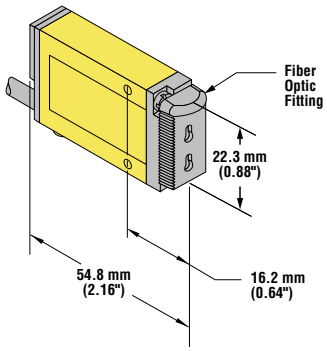

Models with suffix F and FV

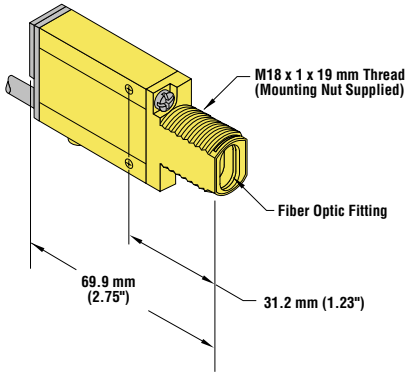

QD Models

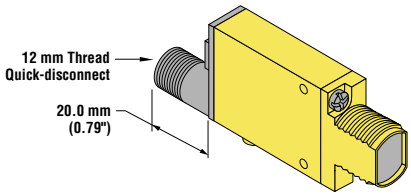

Sensor Features

(shown with gasketed acrylic cover removed)

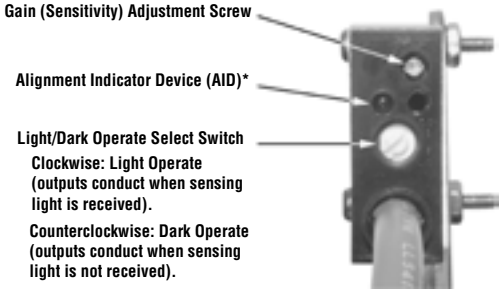

*U.S. Patent no. 4356393

NOTES:

- Please observe proper ESD precautions (grounding) when adjusting Gain pot or LO/DO switch.
- When turning the Light/Dark Operate Select switch, be careful not to damage the small tabs on the switch.

Sensor Mounting and Alignment

MINI-BEAM sensors perform most reliably if they are properly aligned and securely mounted. For maximum mechanical stability, final-mount MINI-BEAM sensors through 18 mm diameter holes by their threaded barrel (where available), or use a mounting bracket. A complete selection of mounting brackets is available. Visit www.bannerengineering.com/69942, or contact the factory for information on mounting options.

Begin with line-of-sight positioning of the MINI-BEAM sensor to its emitter (opposed-mode sensing) or to its target (all other sensing modes). When using a retroreflective sensor, the target is the retroreflector ("retro target"). For diffuse or convergent sensing modes, the target is the object to be detected.

Apply power to the sensor (and to the emitter, if using the opposed mode). Advance the 15-turn Gain control to maximum (clockwise end of rotation), using a small flat-blade screwdriver. The Gain control is clutched at both ends to avoid damage, and will "free-wheel" when either endpoint is reached. See Sensor Features illustration on page 2.

If the MINI-BEAM sensor is receiving its light signal, the red LED Alignment indicator will be ON and flashing at a rate proportional to the signal strength (faster = more signal). Move the sensor (or move the retro target, if applicable) up-down-right-left (including angular rotation) to find the center of the movement zone within which the LED indicator remains ON. Reducing the Gain setting will reduce the size of the movement zone, and enable more precise alignment.

Repeat the alignment motions after each Gain reduction. When optimum alignment is acheived, mount sensor(s) (and the retro target, if applicable) solidly in that position. Increase the Gain to maximum.

Test the sensor by placing the object to be detected in the sensing position, then removing it. The Alignment indicator LED should come ON when the sensing beam is established (Light condition), and go OFF when the beam is broken (Dark condition). If the Alignment indicator LED stays ON for both sensing conditions, consider the following tips for each sensing mode.

Alignment Tips

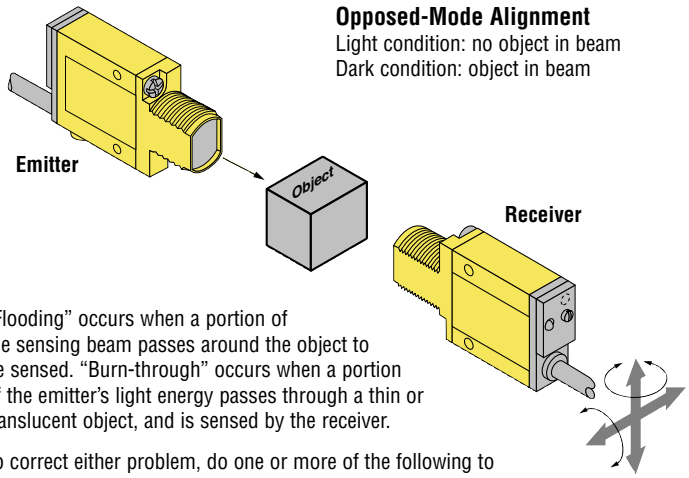

Opposed-Mode Alignment

Light condition: no object in beam
Dark condition: object in beam

"Flooding" occurs when a portion of the sensing beam passes around the object to be sensed. "Burn-through" occurs when a portion of the emitter's light energy passes through a thin or translucent object, and is sensed by the receiver.

To correct either problem, do one or more of the following to reduce the light energy:

- Reduce the Gain adjustment on the receiver.
- Add an aperture to one or both lenses. (MINI-BEAM apertures, available from Banner, fit neatly inside the lens assembly.)
- Intentionally misalign the emitter and receiver.

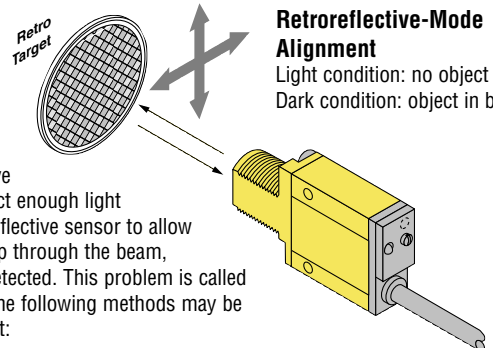

Retroreflective-Mode Alignment

Light condition: no object in beam
Dark condition: object in beam

A highly reflective object may reflect enough light back to a retroreflective sensor to allow that object to slip through the beam, without being detected. This problem is called "proxing," and the following methods may be used to correct it:

- Position the sensor and retro target so the beam will not strike a shiny surface perpendicular to the sensor lens.
- Reduce the Gain adjustment.
- Add a polarizing filter (for model SM2A312LV).

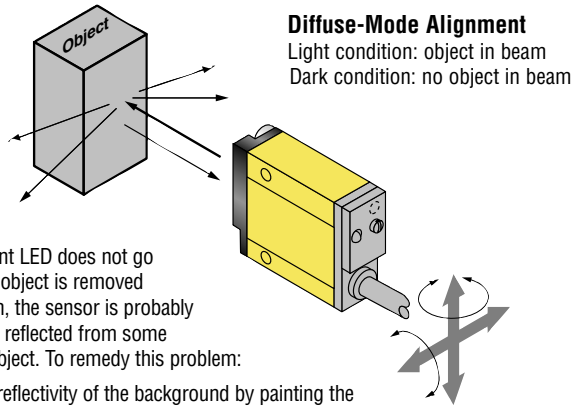

Diffuse-Mode Alignment

Light condition: object in beam
Dark condition: no object in beam

If the Alignment LED does not go OFF when the object is removed from the beam, the sensor is probably detecting light reflected from some background object. To remedy this problem:

- Reduce the reflectivity of the background by painting the surface(s) flat-black, scuffing any shiny surface, or drilling a large hole, directly opposite the diffuse sensor.
- Move the sensor closer to the object to be detected and reduce the Gain adjustment. Rule of thumb for diffuse sensing: The distance to the nearest background object should be at least three times the sensing distance.

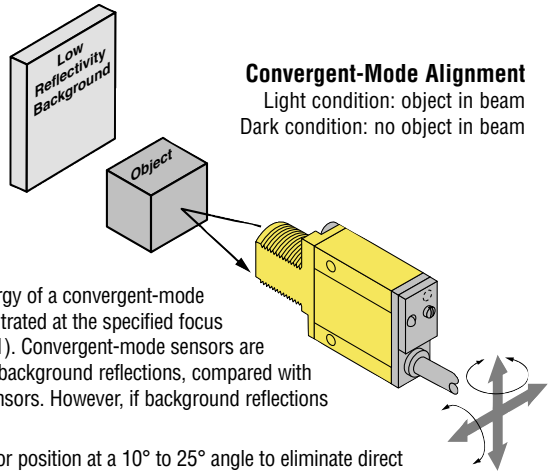

Convergent-Mode Alignment

Light condition: object in beam
Dark condition: no object in beam

The sensing energy of a convergent-mode sensor is concentrated at the specified focus point (see page 1). Convergent-mode sensors are less sensitive to background reflections, compared with diffuse-mode sensors. However, if background reflections are a problem:

- Skew the sensor position at a 10° to 25° angle to eliminate direct reflections from shiny background surfaces.
- Reduce the reflectivity of the background by painting the surface(s) flat-black, scuffing any shiny surface, or drilling a large hole, directly opposite the sensor.
- Reduce the Gain adjustment.

Fiber Installation

Glass Fiber Installation

1) Install the O-ring (supplied with the fiber) on each fiber end, as shown in the drawing.
2) While pressing the fiber ends firmly into the ports on the sensor front, slide the U-shaped retaining clip (supplied with the sensor) into the slot in the sensor's barrel, until it snaps into place.

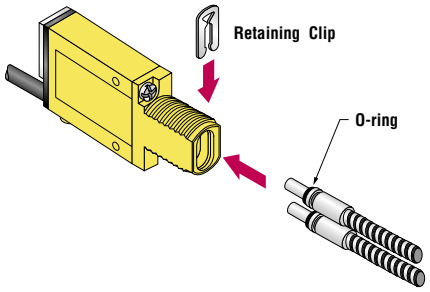

Plastic Fiber Installation

1) With supplied fiber cutter, make a clean cut at control ends of fibers.
2) Unlock the fiber gripper as shown below. Apply appropriate fiber adaptors prior to fiber insertion, if needed.
3) Gently insert the prepared fiber ends into the ports, as far as they will go.
4) Slide the fiber gripper back to lock, as shown below.

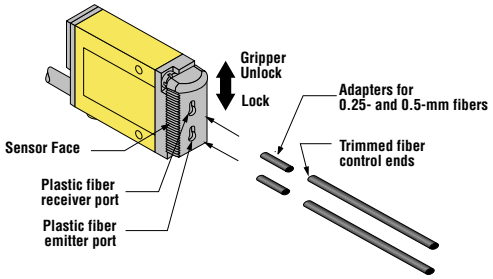

Specifications

Supply Voltage and Current
24 to 240V ac (50/60 Hz), 250V ac maximum

Supply Protection Circuitry
Protected against transient voltages

Output Configuration
SPST SCR solid-state relay with either normally closed or normally open contact ("light/dark operate" selectable); 2-wire hookup

Output Rating
Minimum load current 5 mA; maximum steady-state load capability 300 mA to 50°C ambient (122°F) 100 mA to 70°C ambient (158°F)

Inrush capability: 3 amps for 1 second (non repetitive); 10 amps for 1 cycle (non repetitive)

OFF-state leakage current: less than 1.7 mA rms

ON-state voltage drop: ≤ 5 volts at 300 mA load, ≤ 10 volts at 15 mA load

Output Protection Circuitry
Protected against false pulse on power-up

Output Response Time
Opposed: 2 millisecond on and 1 millisecond off;
Non-Polarized and Polarized Retro, Convergent, and Plastic Fiber Optic: 4 milliseconds on and off;
Diffuse and Glass Fiber Optic: 8 milliseconds on and off.
OFF response time specification does not include load response of up to 1/2 ac cycle (8.3 milliseconds). Response time specification of load should be considered when important. (NOTE: 300 millisecond delay on power-up.)

Repeatability
Opposed: 0.3 milliseconds;
Non-Polarized and Polarized Retro, Convergent, and Plastic Fiber Optic: 1.3 milliseconds;
Diffuse and Glass Fiber Optic: 2.6 milliseconds.
Response time and repeatability specifications are independent of signal strength.

Adjustments
Light/Dark Operate Select switch, and 15-turn slotted brass screw Gain (sensitivity) adjustment potentiometer (clutched at both ends of travel). Both controls are located on the rear panel of the sensor and are protected by a gasketed, clear acrylic cover (see page 2).

Indicators
Red indicator LED on rear of sensor is ON when the load is energized.

Construction
Reinforced thermoplastic polyester housing, totally encapsulated, o-ring sealing, acrylic lenses, stainless steel screws

Environmental Rating
Meets NEMA standards 1, 2, 3, 3S, 4, 4X, 6, 12, and 13; IEC IP67.

Connections
PVC-jacketed 2-conductor 2 m (6.5') or 9 m (30') cables, or 3-pin Micro-style QD fitting; QD cables available separately.

Operating Conditions
Temperature: -20° to +70°C (-4° to +158°F)
Maximum relative humidity: 90% at 50°C (non-condensing)

Application Notes
- Overload conditions can destroy ac MINI-BEAM sensors. Directly wiring sensor without load series, across hot and neutral will damage sensor (except emitter models).
- Low-voltage use requires careful analysis of the load to determine if the sensor's leakage current or on-state voltage will interfere with proper operation of the load.
- The false-pulse protection feature may cause momentary drop-out of the load when the sensor is wired in series or parallel with mechanical switch contacts.

Certifications

Banner Engineering Corp Limited Warranty
Banner Engineering Corp. warrants its products to be free from defects in material and workmanship for one year following the date of shipment. Banner Engineering Corp. will repair or replace, free of charge, any product of its manufacture which, at the time it is returned to the factory, is found to have been defective during the warranty period. This warranty does not cover damage or liability for misuse, abuse, or the improper application or installation of the Banner product.
THIS LIMITED WARRANTY IS EXCLUSIVE AND IN LIEU OF ALL OTHER WARRANTIES WHETHER EXPRESS OR IMPLIED (INCLUDING, WITHOUT LIMITATION, ANY WARRANTY OF MERCHANTABILITY OR FITNESS FOR A PARTICULAR PURPOSE), AND WHETHER ARISING UNDER COURSE OF PERFORMANCE, COURSE OF DEALING OR TRADE USAGE.
This Warranty is exclusive and limited to repair or, at the discretion of Banner Engineering Corp., replacement. IN NO EVENT SHALL BANNER ENGINEERING CORP. BE LIABLE TO BUYER OR ANY OTHER PERSON OR ENTITY FOR ANY EXTRA COSTS, EXPENSES, LOSSES, LOSS OF PROFITS, OR ANY INCIDENTAL, CONSEQUENTIAL OR SPECIAL DAMAGES RESULTING FROM ANY PRODUCT DEFECT OR FROM THE USE OR INABILITY TO USE THE PRODUCT, WHETHER ARISING IN CONTRACT OR WARRANTY, STATUTE, TORT, STRICT LIABILITY, NEGLIGENCE, OR OTHERWISE.
Banner Engineering Corp. reserves the right to change, modify or improve the design of the product without assuming any obligations or liabilities relating to any product previously manufactured by Banner Engineering Corp.

BANNER®
more sensors, more solutions