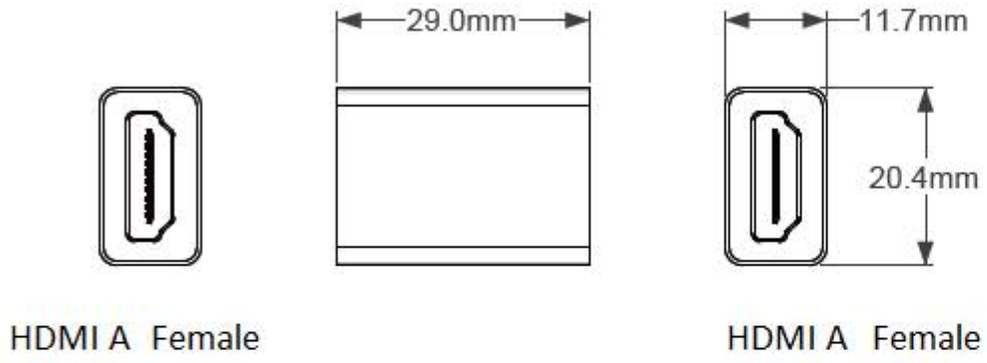

HDMI A Female

HDMI A Female

Pin Assignment

HDMI Receptacle	HDMI Receptacle
1	1
2	2
3	3
4	4
5	5
6	6
7	7
8	8
9	9
10	10
11	11
12	12
13	13
14	14
15	15
16	16
17	17
18	18
19	19
Shell	Shell

Specification

1. Conn.	HDMI Receptacle, Conductor: Gold Plated, Shell: Gold Plated, Insulator: Black
2. Copper Foil	6*52mm
3. Inner Mold	LDPE
4. Hood	Aluminum, 28.80*11.75*20.40, Color: Gold
5. Outer Molding	PVC: 45P, Color: Black

SECOMP

Drawing Date : 2019/03/27

Product Name	ROLINE GOLD Adapter HDMI / HDMI, F/F
Product No.	12.03.3153

Approve	Check	Draw	Design
Allen	Allen	Kuan	Kuan

Scale 1:1 Unit : mm

Rev.	Date	Contents of Change	Design
1			
2			
3			