Product data sheet
Characteristics

XS1N18PC410DSCV
inductive sensor XS1 M18 - PNP NO&NC- Flush- Sn5mm- 9 VDC -M12



Main

Range of product	OsiSense XS
Series name	General purpose
Sensor type	Inductive proximity sensor
Device application	Mobile equipment Light hoisting
Sensor name	XS1
Sensor design	Cylindrical M18
Body type	Fixed
Detector flush mounting acceptance	Flush mountable
Type of output signal	Discrete
Wiring technique	4-wire
[Sn] nominal sensing distance	5 mm
Discrete output function	1 NO + 1 NC
Output circuit type	DC
Discrete output type	PNP
Electrical connection	4 pins M12 male connector
[Us] rated supply voltage	9 V DC with reverse polarity protection
IP degree of protection	IP67 IP65 conforming to IEC 60529 IP69K conforming to DIN 40050

Complementary

Safety level	SILCL 2 conforming to IEC 62061 PL = d conforming to EN/ISO 13849-1 SIL 2 conforming to EN/IEC 61508
Safety reliability data	MTTFd = 1810 years PFHd = 62.9E-9 1/h SFF = 92 % DC = 74 % with appropriate safety controller
Service life	20 yr
Detection face	Frontal
Status LED	1 LED yellow for output state
Supply voltage limits	9...36 V DC
Switching frequency	<= 2000 Hz
Voltage drop	<= 2 V at closed state
Current consumption	0...10 mA at no-load
Delay first up	<= 5 ms
Delay response	<= 0.15 ms
Delay recovery	<= 0.35 ms
Marking	CE
Threaded length	28 mm
Height	18 mm
Length	51 mm
Product weight	0.04 kg

The information provided in this documentation contains general descriptions and/or technical characteristics of the performance of the products contained herein.
This documentation is not intended as a substitute for and is not to be used for determining suitability or reliability of these products for specific user applications.
It is the duty of any such user or integrator to perform the appropriate and complete risk analysis, evaluation and testing of the products with respect to the relevant specific application or use thereof.
Neither Schneider Electric Industries SAS nor any of its affiliates or subsidiaries shall be responsible or liable for misuse of the information contained herein.

Environment

Standards	EN/ISO 13849-1 IEC 62061
Product certifications	CSA TÜV UL E2
Ambient air temperature for operation	-40...60 °C
Ambient air temperature for storage	-40...85 °C
Vibration resistance	25 gn amplitude = +/- 2 mm (f = 10...55 Hz) conforming to IEC 60068-2-6
Shock resistance	50 gn for 11 ms conforming to IEC 60068-2-27

Offer Sustainability

RoHS (date code: YYWW)	Compliant - since 1513 - Schneider Electric declaration of conformity Schneider Electric declaration of conformity
REACh	Reference not containing SVHC above the threshold

Dimensions

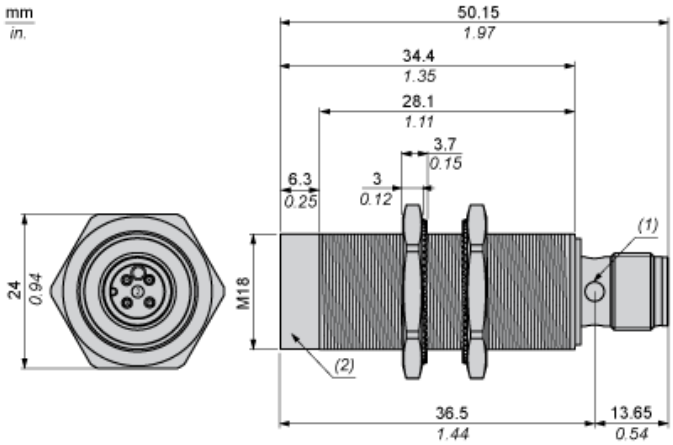

(1) LED
(2) Label

Minimum Mounting Distances

Side by side

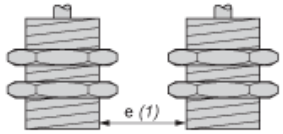

e (1) 10 mm/0.39 in.
≥

Face to face

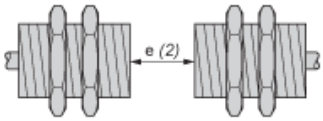

e (2) 60 mm/2.36 in.
≥

Facing a metal object

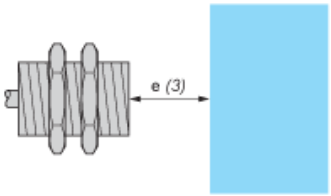

e (3) 15 mm/0.60 in
≥

Wiring Schemes

M12 connector



PNP 4-wire

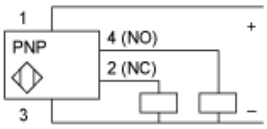

Performance Curves

Standard Steel Target : 18x18x1 mm

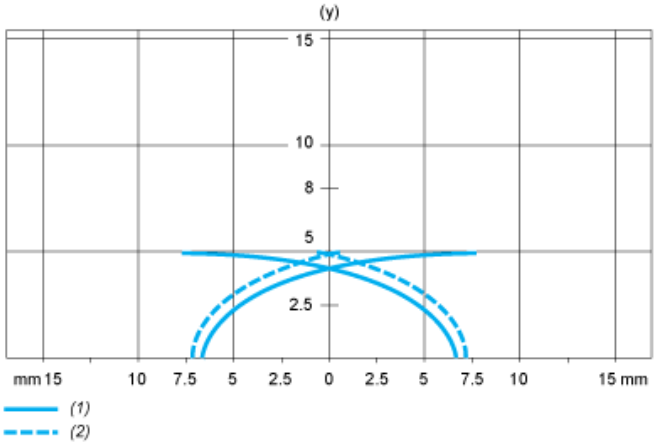

(1) Pick-up points
(2) Drop-out points (object approaching from the side)
(y) Sensing distance in mm