FILE AMEND NOTE	DATE	REV.
ORIGINAL EDITION	2019/01/29	B/0

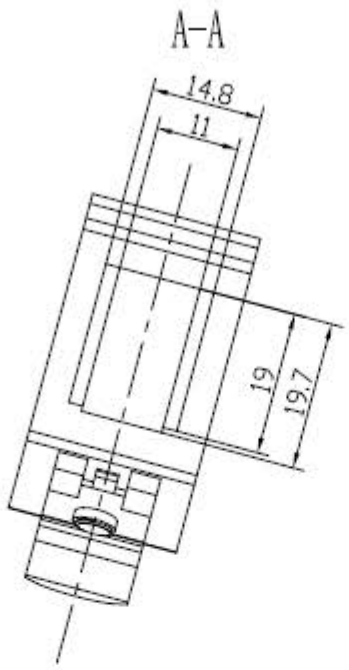

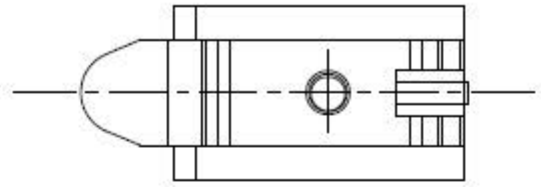

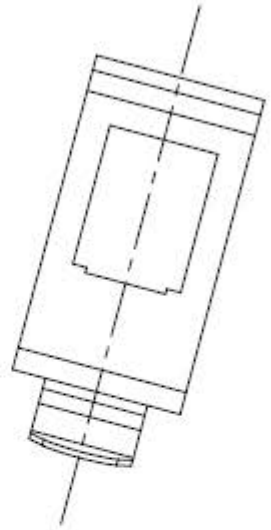

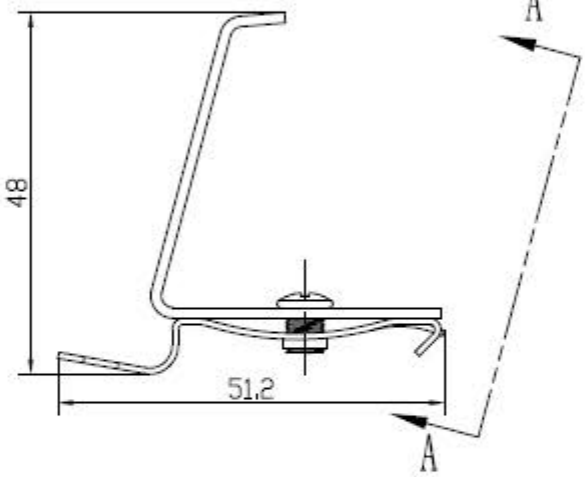

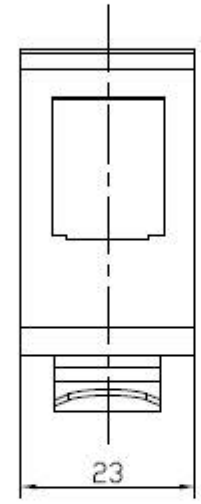

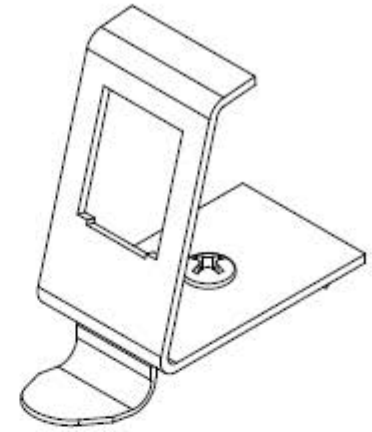



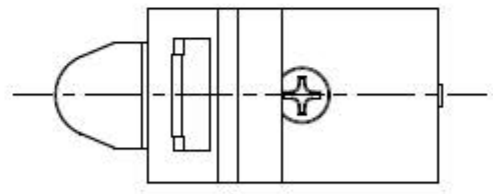

MATERIAL LIST

No.	PART NAME	DESCRIPTION	QTY
	MATERIAL	STAINLESS STEEL	

SECOMP

NAME	ROLINE DIN Rail adapter for 1 keystone module silver			TOLERANCE	
				X. ±1.00MM	
MODEL No.	21.13.1307			X.X ±0.50 MM	
APPROVE BY	CHECK BY	DRAW BY		SCALE	MM
				PAGE	1/1