OGH280

Diffuse reflection sensor with background suppression

OGH-HPKG/US/CUBE/100MM

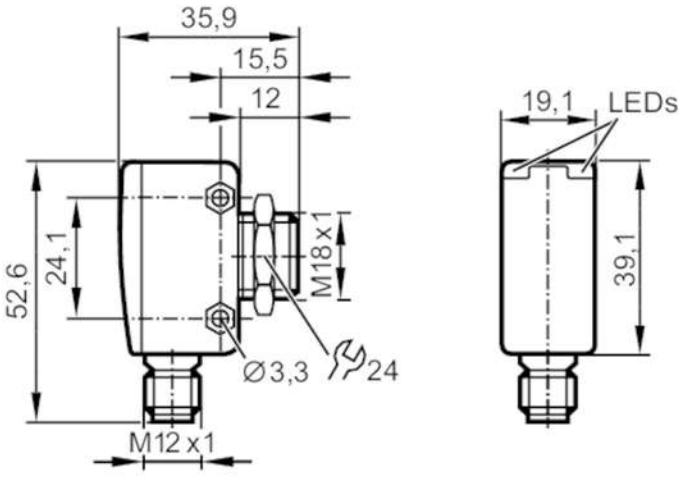

transmitter in lower lens
receiver in upper lens

Product characteristics		
Type of light		red light
Housing		rectangular with M18 thread
Application		
Special feature		Background suppression
Function principle		Diffuse reflection sensor
Electrical data		
Operating voltage	[V]	10...30 DC; ("supply class 2" to cULus)
Rated insulation voltage	[V]	32
Current consumption	[mA]	25
Protection class		III
Reverse polarity protection		yes
Max. power-on delay time	[ms]	300
Type of light		red light
Wave length	[nm]	645
Outputs		
Electrical design		PNP
Output function		light-on mode
Max. voltage drop switching output DC	[V]	2.5
Permanent current rating of switching output DC	[mA]	200
Switching frequency DC	[Hz]	1000
Short-circuit protection		yes
Type of short-circuit protection		pulsed
Detection zone		
Range	[mm]	< 100; (white paper 200 x 200 mm 90% remission)

OGH280

Diffuse reflection sensor with background suppression

OGH-HPKG/US/CUBE/100MM

Range on white object (90 % remission)	[mm]	< 100	
Range on grey object (18 % remission)	[mm]	< 100	
Range on black object (6 % remission)	[mm]	< 100	
Range adjustable		no	
Max. light spot diameter	[mm]	7	
Light spot dimensions refer to		at maximum range	
Background suppression available		yes	
Interfaces			
Communication interface		IO-Link	
Transmission type		COM2 (38,4 kBaud)	
IO-Link revision		1.1	
SDCI standard		IEC 61131-9	
Profiles		Measuring Sensor, Identification and Diagnosis, Switching Signal Channel, Teach Channel	
SIO mode		yes	
Required master port type		A	
Min. process cycle time	[ms]	10	
IO-Link process data (cyclical)		**function**	**bit length**
		process value	16
		device status	4
		binary switching information	1
IO-Link functions (acyclical)		application specific tag; operating hours counter; switching cycles counter	
Supported DeviceIDs		**Type of operation**	**DeviceID**
		default	1131
Note		For further information please see the IODD PDF file under "Downloads"	
Operating conditions			
Ambient temperature	[°C]	-25...60	
Storage temperature	[°C]	-40...60	
Protection		IP 65; IP 67	
Tests / approvals			
EMC		EN 60947-5-2	
MTTF	[years]	782	
UL approval		Ta	-25...60 °C
		Enclosure type	Type 1
		power supply	Class 2
		File number UL	E174191
Mechanical data			
Weight	[g]	59.5	
Housing		rectangular with M18 thread	
Dimensions	[mm]	52.6 x 19.1 x 35.9	
Thread designation		M18 x 1	
Materials		diecast zinc; PEI	
Lens material		PEI	

OGH280

Diffuse reflection sensor with background suppression

OGH-HPKG/US/CUBE/100MM

Lens alignment	side lens	
Displays / operating elements		
Display	switching status	1 x LED, yellow
	operation	1 x LED, green
Accessories		
Items supplied	lock nut: 1	
Remarks		
Pack quantity	1 pcs.	
Electrical connection		

Connector: 1 x M12; coding: A



Connection

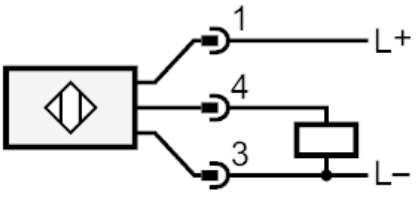

OGH280

Diffuse reflection sensor with background suppression

OGH-HPKG/US/CUBE/100MM

Other data

Repeatability / precision: 6 σ

	repeatability of the measured values	
Abstand	white (90 % remission)	black (6 %...90 % remission)
20 mm	0.5 mm	1.0 mm
50 mm	0.8 mm	2.0 mm
100 mm	1.5 mm	4.5 mm

	accuracy	
Abstand	white (90 % remission)	black (6 %...90 % remission)
20 mm	± 1.5 mm	± 1.8 mm
50 mm	± 3.0 mm	± 3.5 mm
100 mm	± 5.0 mm	± 6.5 mm

The values apply at	
Extraneous light on the object	< 10 klx
constant ambient conditions	23 °C / 960 hPa
minimum power-on time in minutes	10