PERFORMANCE
MADE
SMARTER

Product manual
5331
2-wire programmable transmitter



TEMPERATURE | I.S. INTERFACES | COMMUNICATION INTERFACES | MULTIFUNCTIONAL | ISOLATION | DISPLAY

No. 5331V116-UK
From ser. no. 141365001

PR electronics

6 Product Pillars
to meet your every need

Individually outstanding, unrivalled in combination

With our innovative, patented technologies, we make signal conditioning smarter and simpler. Our portfolio is composed of six product areas, where we offer a wide range of analog and digital devices covering over a thousand applications in industrial and factory automation. All our products comply with or surpass the highest industry standards, ensuring reliability in even the harshest of environments and have a 5-year warranty for greater peace of mind.



Temperature

Our range of temperature transmitters and sensors provides the highest level of signal integrity from the measurement point to your control system. You can convert industrial process temperature signals to analog, bus or digital communications using a highly reliable point-to-point solution with a fast response time, automatic self-calibration, sensor error detection, low drift, and top EMC performance in any environment.



I.S. Interface

We deliver the safest signals by validating our products against the toughest safety standards. Through our commitment to innovation, we have made pioneering achievements in developing I.S. interfaces with SIL 2 Full Assessment that are both efficient and cost-effective. Our comprehensive range of analog and digital intrinsically safe isolation barriers offers multifunctional inputs and outputs, making PR an easy-to-implement site standard. Our backplanes further simplify large installations and provide seamless integration to standard DCS systems.



Communication

We provide inexpensive, easy-to-use, future-ready communication interfaces that can access your PR installed base of products. The detachable 4501 Local Operator Interface (LOI) allows for local monitoring of process values, device configuration, error detection and signal simulation. The next generation, our 4511 Remote Operator Interface (ROI) does all that and more, adding remote digital communications via Modbus/RTU, while the analog output signals are still available for redundancy.
With the 4511 you can further expand connectivity with a PR gateway, which connects via industrial Ethernet, wirelessly through a Wi-Fi router or directly with the devices using our Portable Plant Supervisor (PPS) application. The PPS app is available for iOS, Android and Windows.



Multifunction

Our unique range of single devices covering multiple applications is easily deployable as your site standard. Having one variant that applies to a broad range of applications can reduce your installation time and training, and greatly simplify spare parts management at your facilities. Our devices are designed for long-term signal accuracy, low power consumption, immunity to electrical noise and simple programming.



Isolation

Our compact, fast, high-quality 6 mm isolators are based on microprocessor technology to provide exceptional performance and EMC-immunity for dedicated applications at a very low total cost of ownership. They can be stacked both vertically and horizontally with no air gap separation between units required.



Display

Our display range is characterized by its flexibility and stability. The devices meet nearly every demand for display readout of process signals, and have universal input and power supply capabilities. They provide a real-time measurement of your process value no matter the industry, and are engineered to provide a user-friendly and reliable relay of information, even in demanding environments.

2-wire programmable transmitter 5331

Table of contents

Application 4
Technical characteristics 4
Mounting / installation 4
Applications 4
Order 5
Electrical specifications 5
Connections 8
Block diagram 8
Programming 9
Mechanical specifications 9
Mounting of sensor wires 9
ATEX Installation Drawing - 5331A 10
ATEX Installation Drawing - 5331D 11
IECEx Installation Drawing - 5331A 13
IECEx Installation Drawing - 5331D 14
FM Installation Drawing - 5331D 16
CSA Installation Drawing - 5331D 18
INMETRO Installation Drawing - 5331A 19
INMETRO Installation Drawing - 5331D 20
Document history 22

2-wire programmable transmitter
5331

- RTD, TC, Ohm, or mV input
- Extremely high measurement accuracy
- 1.5 kVAC galvanic isolation
- Programmable sensor error value
- For DIN form B sensor head mountings

Application

- Linearised temperature measurement with Pt100... Pt1000, Ni100...Ni1000, or TC sensor.
- Conversion of linear resistance variation to a standard analogue current signal, for instance from valves or Ohmic level sensors.
- Amplification of a bipolar mV signal to a standard 4...20 mA current signal.

Technical characteristics

- Within a few seconds the user can program PR5331 to measure temperatures within all ranges defined by the norms.
- The RTD and resistance inputs have cable compensation for 2-, 3- and 4-wire connection.
- Continuous check of vital stored data for safety reasons.

Mounting / installation

- For DIN form B sensor head mounting. In non-hazardous areas the 5331 can be mounted on a DIN rail with the PR fitting type 8421.

Applications

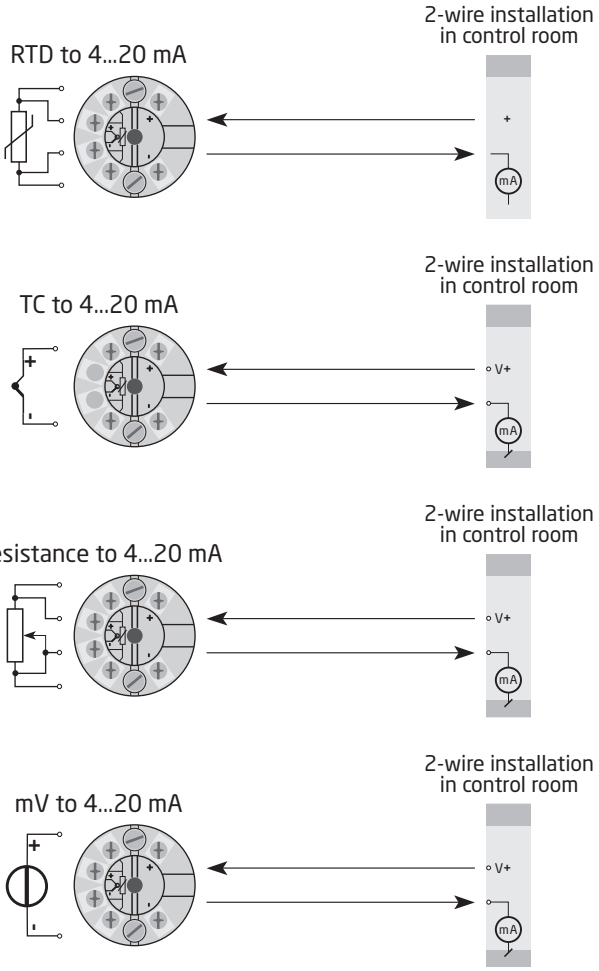

Order

Type	Version	Ambient temperature	Galvanic isolation
5331	Standard : A CSA, FM, ATEX, : D IECEx & INMETRO	-40°C...+85°C : 3	1500 VAC : B

Electrical specifications

Environmental conditions:

Operating temperature . . . . . -40°C to +85°C
Calibration temperature . . . . . 20...28°C
Humidity . . . . . < 95% RH (non-cond.)
Protection degree, enclosure / terminals . . . . . IP68 / IP00

Mechanical specifications:

Dimensions . . . . . Ø 44 x 20.2 mm
Weight . . . . . 50 g
Max. wire size . . . . . 1 x1.5 mm^2 stranded wire
Screw terminal torque . . . . . 0.4 Nm
Vibration . . . . . IEC 60068-2-6
  2...25 Hz . . . . . ±1.6 mm
  25...100 Hz . . . . . ±4 g

Common specifications:

Supply voltage, DC
  Standard . . . . . 7.2...35 VDC
  CSA, FM, ATEX, IECEx & INMETRO . . . . . 7.2...30 VDC
Internal power dissipation
  Standard . . . . . 25 mW...0.8 W
  CSA, FM, ATEX, IECEx & INMETRO . . . . . 25 mW...0.7 W
Voltage drop . . . . . 7.2 VDC
Isolation voltage, test / operation . . . . . 1.5 kVAC / 50 VAC
Warm-up time . . . . . 5 min.
Programming . . . . . Loop Link
Signal / noise ratio . . . . . Min. 60 dB
Response time (programmable) . . . . . 1...60 s
EEprom error check . . . . . < 3.5 s
Signal dynamics, input . . . . . 20 bit
Signal dynamics, output . . . . . 16 bit
Effect of supply voltage variation . . . . . < 0.005% of span / VDC

Accuracy, the greater of general and basic values:

General values		
Input type	Absolute accuracy	Temperature coefficient
All	≤ ±0.05% of span	≤ ±0.01% of span / °C

Basic values		
Input type	Basic accuracy	Temperature coefficient
RTD	≤ ±0.2°C	≤ ±0.01°C/°C
Lin. R	≤ ±0.1 Ω	≤ ±10 mΩ / °C
Volt	≤ ±10 µV	≤ ±1 µV / °C
TC type: E, J, K, L, N, T, U	≤ ±1°C	≤ ±0.05°C / °C
TC type: B, R, S, W3, W5, Lr	≤ ±2°C	≤ ±0.2°C / °C

EMC - immunity influence. . . . . < ±0.5% of span
Extended EMC immunity:
NAMUR NE 21, A criterion, burst . . . . . < ±1% of span

Electrical specifications, input:

RTD and linear resistance input:

RTD type	Min. value	Max. value	Min. span	Standard
Pt100...Pt1000	-200°C	+850°C	25°C	IEC 60751
Ni100...Ni1000	-60°C	+250°C	25°C	DIN 43760
Linear resistance	0 Ω	5000 Ω	30 Ω	-----

Max. offset . . . . . 50% of selec. max. value
Cable resistance per wire (max.). . . . . 5 Ω
Sensor current . . . . . Nom. 0.2 mA
Effect of sensor cable resistance (3- / 4-wire) . . . . . < 0.002 Ω/Ω
Sensor error detection . . . . . Yes

TC input:

Type	Min. temperature	Max. temperature	Min. span	Standard
B	+400°C	+1820°C	100°C	IEC584
E	-100°C	+1000°C	50°C	IEC584
J	-100°C	+1200°C	50°C	IEC584
K	-180°C	+1372°C	50°C	IEC584
L	-100°C	+900°C	50°C	DIN 43710
Lr	-200°C	+800°C	50°C	GOST 3044-84
N	-180°C	+1300°C	50°C	IEC584
R	-50°C	+1760°C	100°C	IEC584
S	-50°C	+1760°C	100°C	IEC584
T	-200°C	+400°C	50°C	IEC584
U	-200°C	+600°C	50°C	DIN 43710
W3	0°C	+2300°C	100°C	ASTM E988-90
W5	0°C	+2300°C	100°C	ASTM E988-90

Max. offset . . . . . 50% of selec. max. value
Cold junction compensation . . . . . < ±1.0°C
Sensor error detection . . . . . Yes
Sensor error current:
When detecting . . . . . Nom. 33 µA
Else. . . . . 0 µA

Voltage input:

Measurement range	-12...800 mV
Min. span	5 mV
Max. offset	50% of selec. max. value
Input resistance	10 MΩ

Output:

Current output:

Signal range.	4...20 mA
Min. signal range	16 mA
Updating time	440 ms
Output signal at EEprom error	≤ 3.5 mA
Load resistance.	≤ (Vsupply - 7.2) / 0.023 [Ω]
Load stability	< ±0.01% of span / 100 Ω

Sensor error detection:

Programmable	3.5...23 mA
Namur NE43 Upscale	23 mA
Namur NE43 Downscale	3.5 mA

Of span = Of the presently selected range

Observed authority requirements:

EMC.	2014/30/EU
RoHS	2011/65/EU
ATEX	2014/34/EU
CCOE	P337392/1
EAC	TR-CU 020/2011

Marine approval:

DNV-GL, Ships & Offshore	Standard for Certification No. 2.4

Ex / I.S. approvals:

ATEX:	
5331A	KEMA 10ATEX0002 X
5331D	KEMA 06ATEX0062 X
IECEx	DEK 13.0035 X
FM	FM17US0013X
CSA	1125003
INMETRO	DEKRA 16.0013 X
CCOE	P337392/2
EAC Ex TR-CU 012/2011	RU C-DK.GB08.V.00410

Connections

Input:

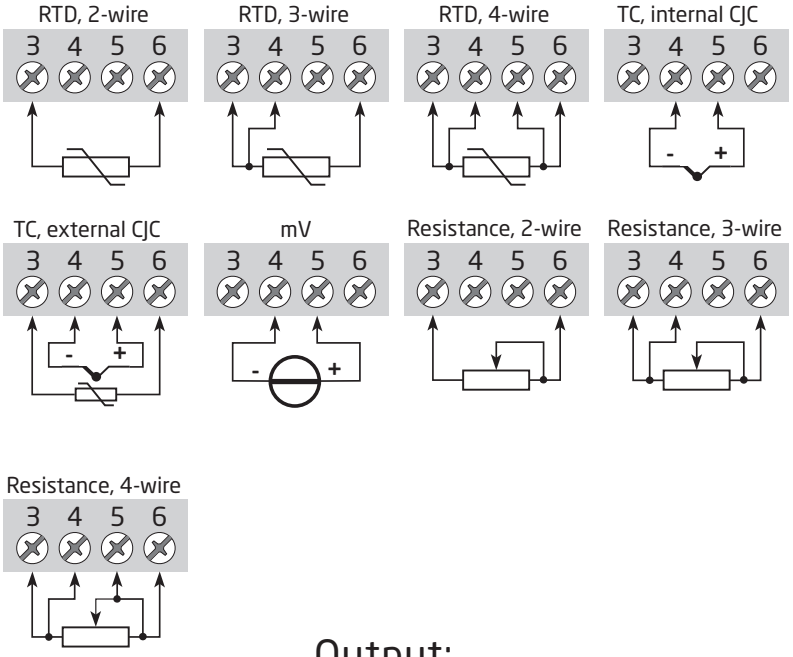

Output:

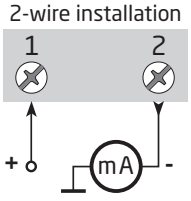

Block diagram

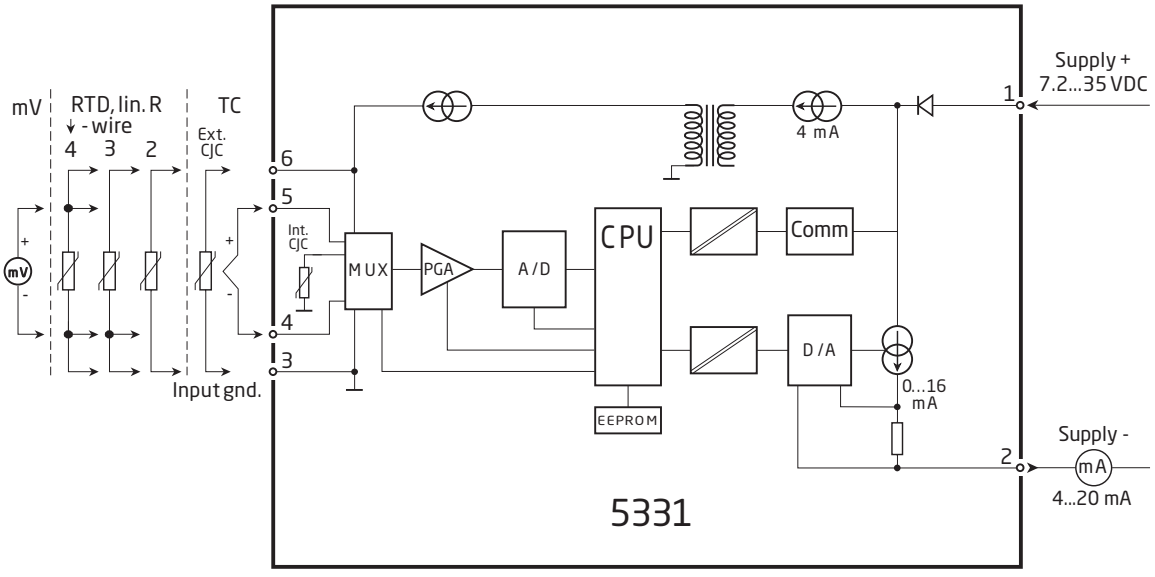

Programming

- Loop Link is a communications interface that is needed for programming 5331.
- For programming please refer to the drawing below and the help functions in PReset.
- Loop link is not approved for communication with modules installed in harzardous (Ex) areas.

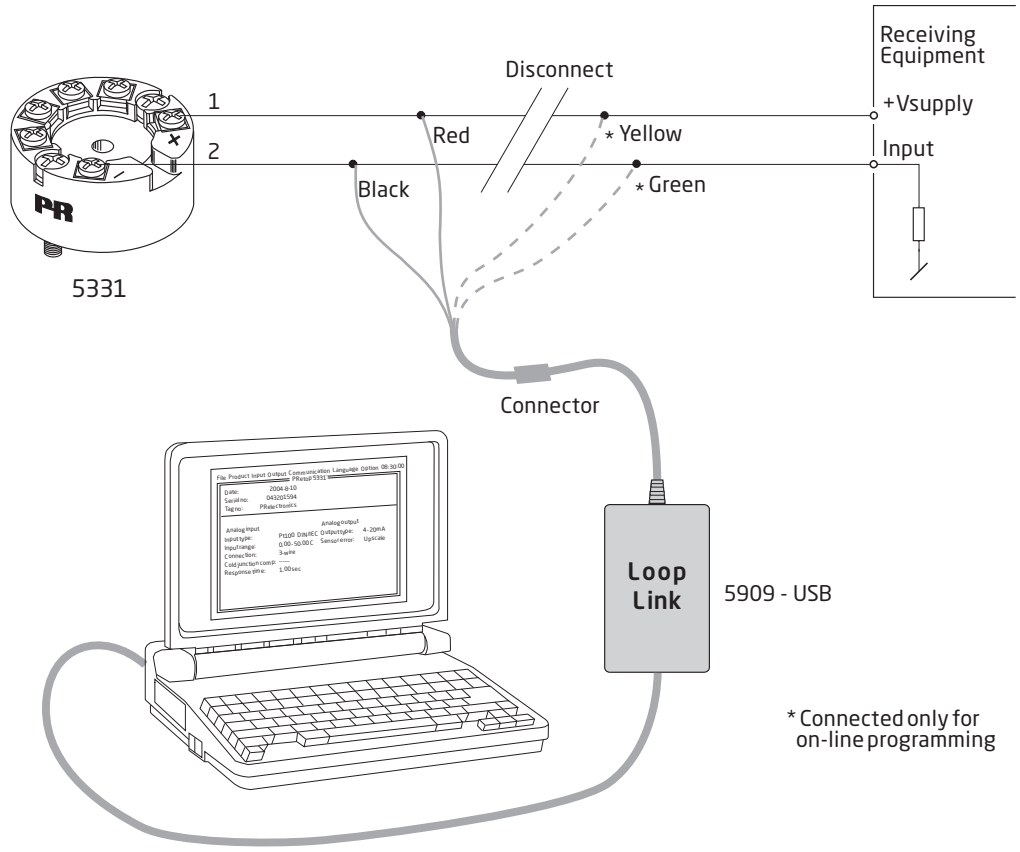

Mechanical specifications

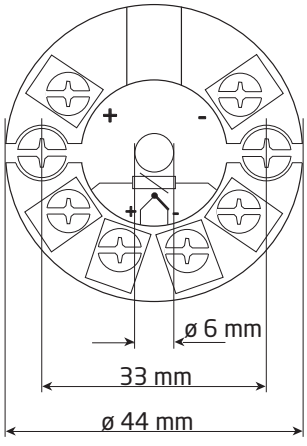

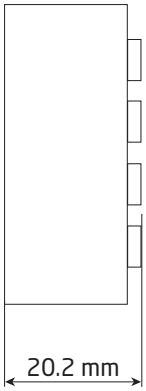

Mounting of sensor wires

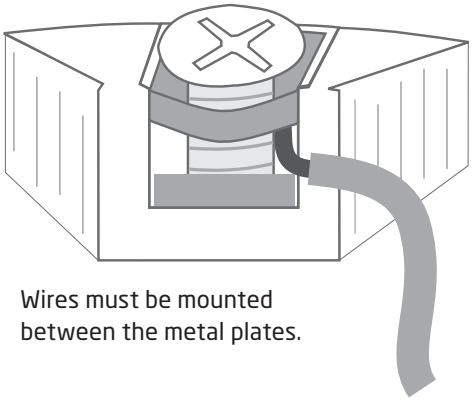

Wires must be mounted between the metal plates.

LERBAKKEN 10, 8410 RØNDE DENMARK. WWW.PRELECTRONICS.COM

ATEX Installation drawing

For safe installation of 5331A3B or 5334A3B the following must be observed. The module shall only be installed by qualified personnel who are familiar with the national and international laws, directives and standards that apply to this area.
Year of manufacture can be taken from the first two digits in the serial number.

ATEX Certificate KEMA 10ATEX 0002 X

Marking  II 3 G Ex nA [ic] IIC T4 … T6 Gc
II 3 G Ex ic IIC T4…T6 Gc
II 3 D Ex ic IIIC Dc

Standards EN 60079-0 : 2012, EN 60079-11 : 2012, EN 60079-15 : 2010

T4: -40 ≤ Ta ≤ 85ºC T6: -40 ≤ Ta ≤ 60ºC	**Terminal: 3,4,5,6** Ex nA [ic]	**Terminal: 1,2** Ex nA	**Terminal: 1,2** Ex ic
	Uo: 9.6 V Io: 25 mA Po: 60 mW Lo: 33 mH Co: 2.4 µF	Umax ≤ 35 VDC	Ui = 35 VDC Ii = 110 mA Li = 10 µH Ci = 1.0 nF

Special conditions for safe use.

For type of protection Ex nA, the transmitter shall be mounted in a metal enclosure providing a degree of protection of at least IP54 according to EN60529.

For use in the presence of combustible dusts the transmitter shall be mounted in an enclosure providing a degree of protection of at least IP6X in accordance with EN60529, the surface temperature of the outer enclosure is 20 K above the ambient temperature.

For an ambient temperature ≥ 60ºC, heat resistant cables shall be used with a rating of at least 20 K above the ambient temperature.

LERBAKKEN 10, 8410 RØNDE DENMARK. WWW.PRELECTRONICS.COM

ATEX Installation drawing

For safe installation of 5331D or 5334B the following must be observed. The module shall only be installed by qualified personnel who are familiar with the national and international laws, directives and standards that apply to this area.
Year of manufacture can be taken from the first two digits in the serial number.

ATEX Certificate KEMA 06ATEX 0062 X

Marking
II 1 G Ex ia IIC T4...T6 Ga
II 1 D Ex ia IIIC Da
I M1 Ex ia I Ma

Standards EN 60079-0 : 2012, EN 60079-11 : 2012, EN 60079-26 : 2007, EN 60079-15 :2010

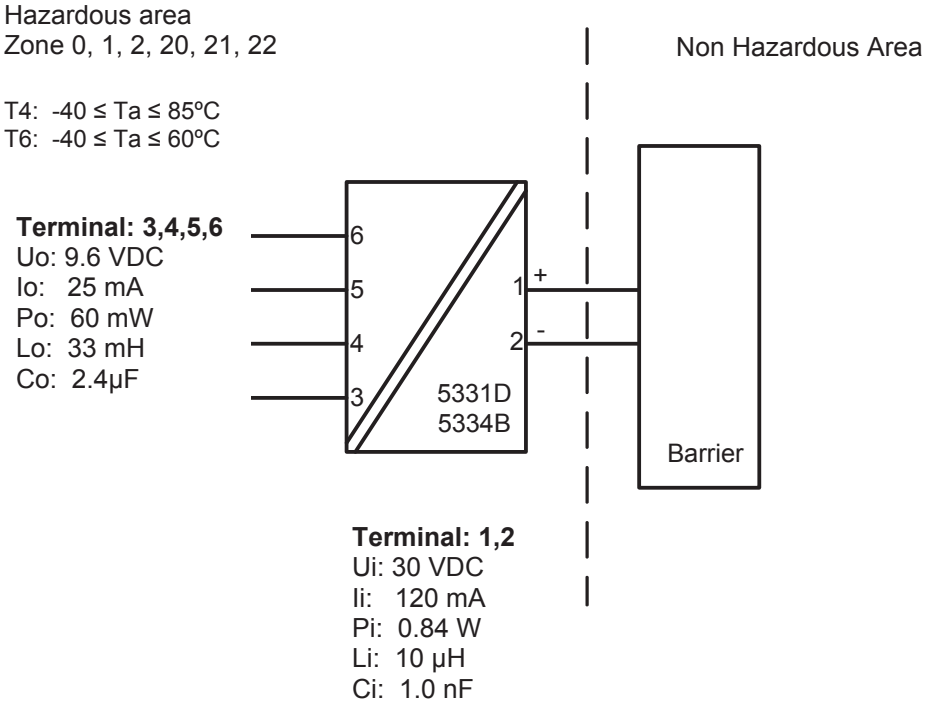

Installation notes.

The sensor circuit is not infallibly galvanic isolated from the input circuit. However, the galvanic isolation between the circuits is capable of withstanding a test voltage of 500Vac during 1 minute.

In a potentially explosive gas atmosphere, the transmitter shall be mounted in an enclosure in order to provide a degree of protection of at least IP20 according to EN60529.

If the transmitter is installed in an explosive atmosphere requiring the use of equipment of category 1 G, 1 M or 2 M, and if the enclosure is made of aluminum, if must be installed such, that ignition sources due to impact and friction sparks are excluded.

if the enclosure is made of non-metallic materials, electrostatic charging shall be avoided.

For installation in a potentially explosive dust atmosphere, the following instructions apply:

The transmitter shall be mounted in a metal enclosure form B according to DIN43729 that is providing a degree of protection of at least IP6X according to EN60529, that is suitable for the application and correctly installed.

Cable entries and blanking elements shall be used that are suitable for the application and correctly installed.

For an ambient temperature ≥ 60ºC, heat resistant cables shall be used with a rating of at least 20 K above the ambient temperature.

The surface temperature of the enclosure is equal to the ambient temperature plus 20 K, for a dust layer with a thickness up to 5 mm

LERBAKKEN 10, 8410 RØNDE DENMARK. WWW.PRELECTRONICS.COM

IECEx Installation drawing

For safe installation of 5331A or 5334A the following must be observed. The module shall only be installed by qualified personnel who are familiar with the national and international laws, directives and standards that apply to this area.
Year of manufacture can be taken from the first two digits in the serial number.

Certificate	IECEx DEK 13.0035X
Marking	Ex nA [ic] IIC T4..T6 Gc Ex ic IIC T4..T6 Gc Ex ic IIIC Dc
Standards	IEC 60079-0 : 2011, IEC 60079-11 : 2011, IEC 60079-15 : 2010

T4: -40 ≤ Ta ≤ 85ºC T6: -40 ≤ Ta ≤ 60ºC	**Terminal: 3,4,5,6** Uo: 9.6 V Io: 25 mA Po: 60 mW Lo: 33 mH Co: 2.4 µF	**Terminal: 1,2** Ex nA Umax =35 VDC	**Terminal: 1,2** Ex ic Ui = 35 VDC Ii = 110mA Li = 10 µH Ci = 1.0 nF

Installation note:

For installation in a potentialy explosive gas atmosphere, the following instructions apply:

For nA installation the transmitter must be installed in an metal enclosure, e.g. a form B enclosure providing a degree of protection of at least IP54 according to IEC60529 or in an enclosure with type of protection Ex n or Ex e.

For ic installation the transmitter must be installed in enclosure providing a degree of protection of at least IP20 according to IEC60529 and that is suitable for the application.

Cable entry devices and blanking elements shall fulfill the same requirements
For an ambient temperature ≥ 60ºC, heat resistant cables shall be used with a rating of at least 20 K above the ambient temperature.

For installation in a potentially explosive dust atmposphere, the following instructions apply:

The surface temperature of the enclosure is equal to the ambient temperature plus 20 K, for a dust layer with a thickness up to 5 mm.
The transmitter must be mounted in a enclosure according to DIN 43729 that provides a degree of protection of at least IP6X according to IEC60529, and that is suitable for the application. Cable entry devices and blanking elements shall fulfill the same requirements.

LERBAKKEN 10, 8410 RØNDE DENMARK. WWW.PRELECTRONICS.COM

IECEx Installation drawing

For safe installation of 5331D or 5334B the following must be observed. The module shall only be Installed by qualified personnel who are familiar with the national and international laws, directives and standards that apply to this area.
Year of manufacture can be taken from the first two digits in the serial number.

.

Certificate	IECEx DEK 13.0035X
Marking	Ex ia IIC T4…T6 Ga Ex ia IIIC Da Ex ia I Ma
Standards	IEC 60079-0 : 2011, IEC 60079-11 : 2011, IEC 60079-26:2006

Hazardous area
Zone 0, 1, 2, 20, 21, 22, M1

Non Hazardous Area

T4: -40 ≤ Ta ≤ 85ºC
T5: -40 ≤ Ta ≤ 60ºC
T6: -40 ≤ Ta ≤ 45ºC

Terminal: 3,4,5,6
Uo: 9.6 VDC
Io: 25 mA
Po: 60 mW
Lo: 33 mH
Co: 2.4 µF

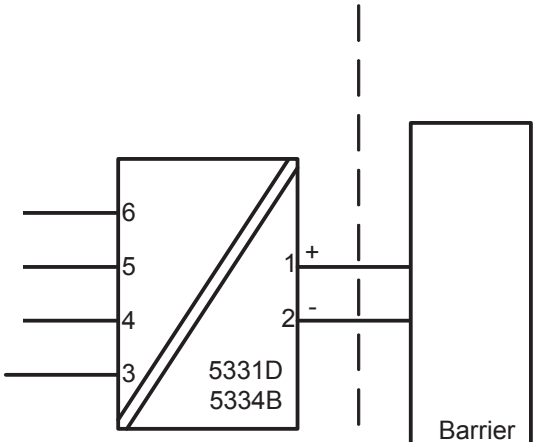

Terminal: 1,2
Ui: 30 VDC
Ii: 120 mA
Pi: 0.84 W
Li: 10 µH
Ci: 1.0 nF

Installation notes.

The sensor circuit is not infallibly galvanic isolated from the input circuit. However, the galvanic isolation between the circuits is capable of withstanding a test voltage of 500Vac during 1 minute.

In a potentially explosive gas atmosphere, the transmitter shall be mounted in a metal form B enclosure in order to provide a degree of protection of at least IP20 according to IEC60529. If however the environment requires a higher degree of protection, this shall be taken into account.

If the transmitter is installed in an explosive atmosphere requiring the use of equipment protection level Ga, Ma and Mb, and if the enclosure is made of aluminum, it must be installed such, that ignition sources due to impact and friction sparks are excluded.

For installation in a potentially explosive dust atmosphere, the following instructions apply:

For explosive dust atmospheres, the surface temperature of the outer enclosure is 20 K above the ambient temperature.

The transmitter shall be mounted in a metal enclosure form B according to DIN43729 that is providing a degree of protection of at least IP6X according to IEC60529, that is suitable for the application and correctly installed.

Cable entries and blanking elements shall be used that are suitable for the application and correctly installed.

For an ambient temperature ≥ 60ºC, heat resistant cables shall be used with a rating of at least 20 K above the ambient temperature.

FM Installation Drawing

Model 5331D, 5332D, 5333D and 5343B

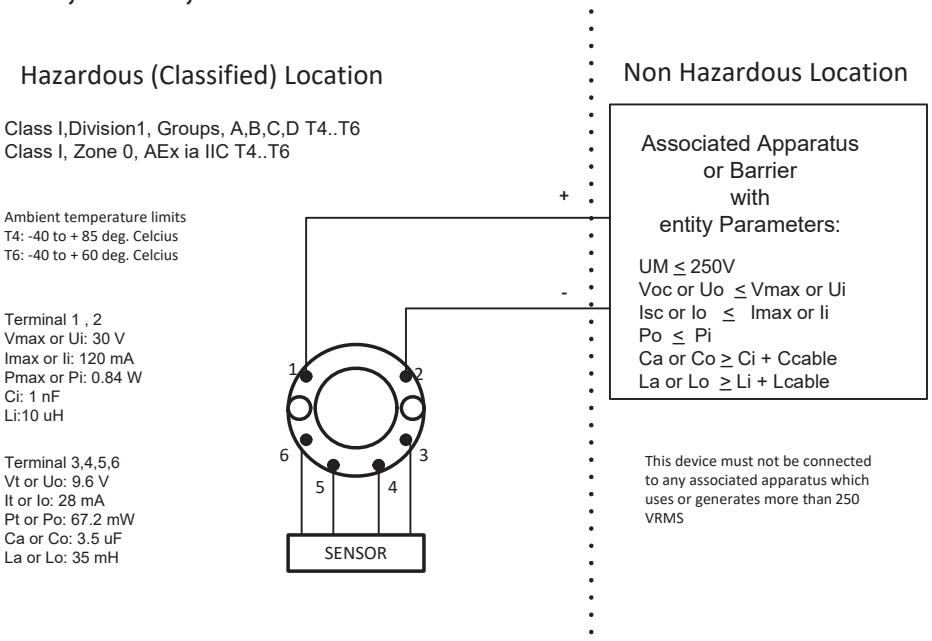

Model 5335D, 5337D

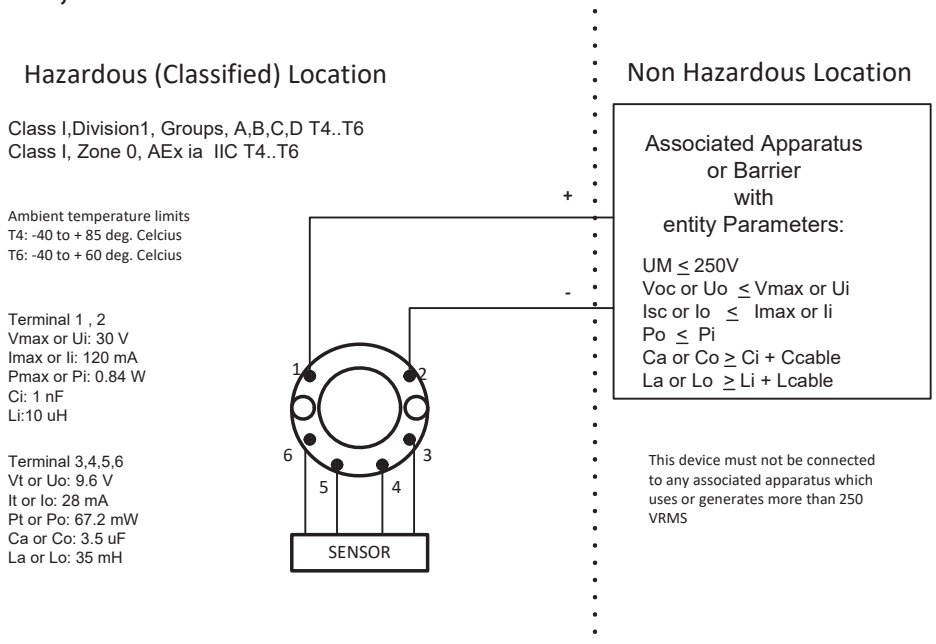

The entity concept
The Transmitter must be installed according to National Electrical Code (ANSI-NFPA 70) and shall be installed with the enclosure, mounting, and spacing segregation requirement of the ultimate application.

Equipment that is FM-approved for intrinsic safety may be connected to barriers based on the ENTITY CONCEPT. This concept permits interconnection of approved transmitters, meters and other devices in combinations which have not been specifically examined by FM, provided that the agency's criteria are met. The combination is then intrinsically safe, if the entity concept is acceptable to the authority having jurisdiction over the installation.

The entity concept criteria are as follows:

The intrinsically safe devices, other than barriers, must not be a source of power.
The maximum voltage Ui(V_{MAX}) and current Ii(I_{MAX}), and maximum power Pi(Pmax), which the device can receive and remain intrinsically safe, must be equal to or greater than the voltage (Uo or V_{OC} or V_t) and current (Io or I_{SC} or I_t) and the power Po which can be delivered by the barrier.

The sum of the maximum unprotected capacitance (C_i) for each intrinsically device and the interconnecting wiring must be less than the capacitance (C_a) which can be safely connected to the barrier.

The sum of the maximum unprotected inductance (L_i) for each intrinsically device and the interconnecting wiring must be less than the inductance (L_a) which can be safely connected to the barrier.

The entity parameters Uo,V_{OC} or V_t and Io,I_{SC} or I_t, and C_a and L_a for barriers are provided by the barrier manufacturer.

NI Field Circuit Parameters

Model 5331D, 5332D, 5333D, 5335D, 5337D and 5343B

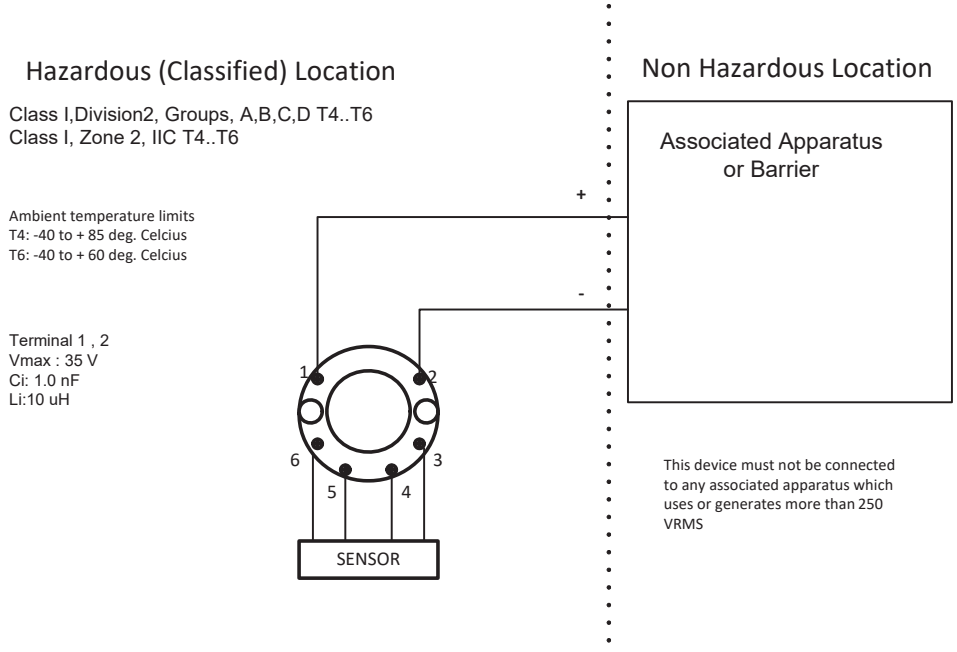

CSA Installation drawing 533XQC03

Hazardous area

T4: -40 ≤ Ta ≤ 85ºC
T6: -40 ≤ Ta ≤ 60ºC

Module 5331D, 5333D
Terminal: 3,4,5,6
Only passive, or non-energy storing devices such as RTD's and Thermocouples may be connected

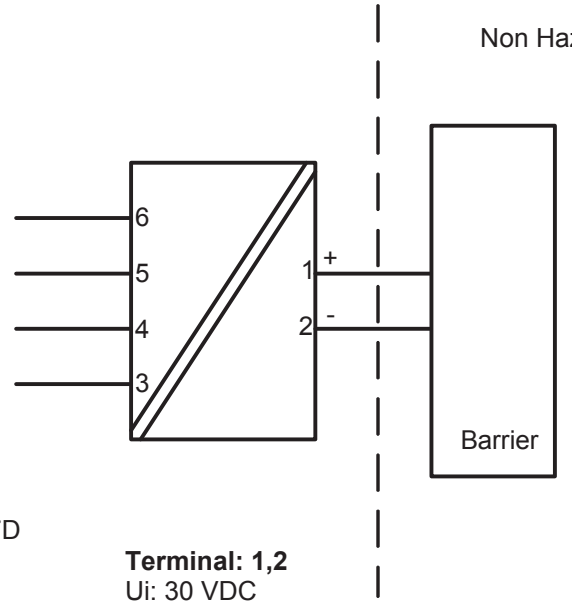

Module 5335D, 5336D and 5337D
Terminal: 3,4,5,6
Uo: 9.6 VDC
Io: 28 mA
Po: 67.2 mW
Lo: 35 mH
Co: 2.5 µF

Terminal: 1,2
Ui: 30 VDC
Ii: 120 mA
Pi: 0.84 W
Li: 10 µH
Ci: 1.0 nF

CLASS 2258 04 - PROCESS CONTROL EQUIPMENT - Intrinsically Safe Entity - For Hazardous Locations
Class I, Division 1, Groups A, B, C and D
Ex ia IIC, Ga

CLASS 2258 84 - PROCESS CONTROL EQUIPMENT - Intrinsically Safe Entity - For Hazardous Locations - Certified to US Standards
Class I, Division 1, Groups A, B, C and D
Class I, Zone 0, AEx ia IIC, Ga

Warning:
Substitution of components may impair intrinsic safety.

The transmitters must be installed in a suitable enclosure to meet installation codes stipulated in the Canadian Electrical Code (CEC) or for US the National Electrical Code (NEC).

LERBAKKEN 10, 8410 RØNDE DENMARK. WWW.PRELECTRONICS.COM

Desenho de Instalação INMETRO



Para instalação segura do 5331A ou 5334A o seguinte deve ser observado. O modelo deve apenas ser instalado por pessoas qualificadas que são familiarizadas com as leis nacionais e internacionais, diretrizes e padrões que se aplicam a esta área.
O ano de fabricação pode ser pego dos dois primeiros dígitos do número de série.

Certificado DEKRA 16.0013 X

Marcas
Ex nA [ic] IIC T4..T6 Gc
Ex ic IIC T4..T6 Gc
Ex ic IIIC Dc

Normas ABNT NBR IEC 60079-0 : 2013; ABNT NBR IEC 60079-11 : 2013
ABNT NBR IEC60079-15 : 2012

T4: -40 ≤ Ta ≤ 85ºC T6: -40 ≤ Ta ≤ 60ºC	**Terminais:** **3,4,5,6** Uo: 9,6 V Io: 25 mA Po: 60 mW Lo: 33 mH Co: 2,4 µF	**Terminais: 1,2** Ex nA U ≤35 VDC	**Terminais: 1,2** Ex ic Ui = 35 VDC Ii = 110 mA Li = 10 µH Ci = 1,0 nF

Notas para instalação

Para a instalação em uma atmosfera de gás potencialmente explosivo, aplicam-se as instruções a seguir:
Para a instalação nA o transmissor deve ser instalado em um invólucro de metal, por exemplo, gabinete em forma B que forneça um grau de proteção de pelo menos IP54 de acordo com ABNT NBR IEC60529 ou em um invólucro com tipo de proteção Ex n ou Ex e.
Para a instalação Ex ic o transmissor deve ser instalado em um invólucro proporcionando um grau de proteção IP20de acordo com a norma ABNT NBR IEC60529. E o invólucro deve, pelo menos, ser adequado para a aplicação e corretamente instalado.

Dispositivos de entrada de cabos e elementos de supressão devem cumprir os mesmos requisitos.

Para temperatura ambiente >= 60ºC, fios de resistência ao calor devem ser usados com uma faixa de pelo menos 20K acima da temperatura ambiente.

Para a instalação em uma atmosfera de poeira potencialmente explosiva , aplicam-se as instruções a seguir:
O transmissor deve ser montado em invólucro de metal forma B de acordo com DIN43729 que está fornecendo pelo menos um grau de proteção IP6X de acordo com ABNT NBR IEC60529.
O invólucro deve ser adequado para aplicação e instalado corretamente.

As entradas dos cabos e os elementos de obturação que podem ser utilizados devem ser adequados à aplicação pretendida e corretamente instalados.
A temperatura da superfície do invólucro é igual à temperatura ambiente mais 20 K, para uma camada de pó, com uma espessura de até 5 mm.

LERBAKKEN 10, 8410 RØNDE DENMARK. WWW.PRELECTRONICS.COM

Desenho de Instalação INMETRO

Para instalação segura do 5331D ou 5334B o seguinte deve ser observado. O modelo deve apenas ser instalado por pessoas qualificadas que são familiarizadas com as leis nacionais e internacionais, diretrizes e padrões que se aplicam a esta área.
O ano de fabricação pode ser pego dos dois primeiros dígitos do número de série.

Certificado .....DEKRA 16.0013 X

Marcas
Ex ia IIC T6…T4 Ga
Ex ia IIIC Da

Normas ABNT NBR IEC 60079-0: 2013; ABNT NBR IEC 60079-11: 2013

Áreas classificadas
Zona 0, 1, 2, 20, 21, 22,

T4: -40 ≤ Ta ≤ 85ºC
T5: -40 ≤ Ta ≤ 60ºC
T6: -40 ≤ Ta ≤ 45ºC

Terminais 3,4,5,6
Uo: 9,6 VDC
Io: 25 mA
Po: 60 mW
Lo: 33 mH
Co: 2,4µF

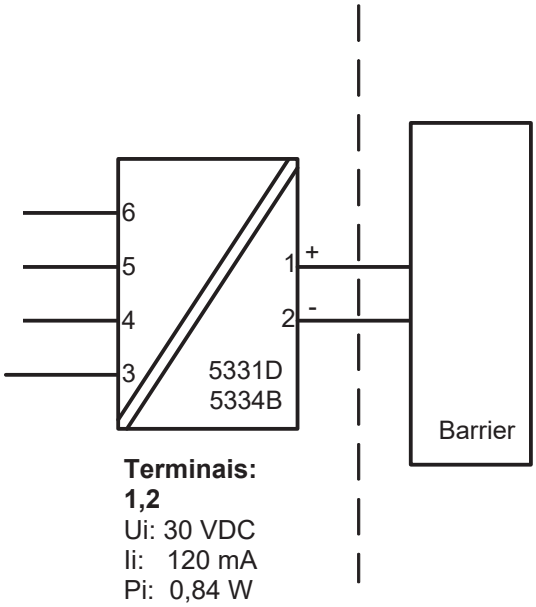

Terminais:
1,2
Ui: 30 VDC
Ii: 120 mA
Pi: 0,84 W
Li: 10µH
Ci: 1,0nF

Notas de instalação

O circuito do sensor não é isolado galvanicamente do circuito de entrada de forma infalível. Contudo, a isolação galvânica entre os circuitos é capaz de resistir a um ensaio de tensão de 500Vac durante 1 minuto.

Em uma atmosfera de gás potencialmente explosiva, o transmissor deve ser montado em um invólucro a fim de garantir um grau de proteção de no mínimo IP20 de acordo com a ABNT NBR IEC60529. Se contudo, o ambiente necessitar de um nível de proteção maior, isso deve ser levado em consideração.

Se o transmissor é instalado em uma atmosfera explosiva exigindo o uso de equipamento de proteção de nível Ga e se o invólucro é feito de alumínio, ele deve ser instalado de modo que, mesmo em caso remoto de avaria, fontes de ignição devido ao impacto e fricção, faíscas são eliminadas.

Se o invólucro é feito de materiais não metálicos, cargas eletroestáticas devem ser evitadas.

Para instalação em atmosfera de poeira potencialmente explosiva, as instruções a seguir são aplicáveis:

O transmissor deve ser montado em invólucro de metal forma B de acordo com DIN43729 que está fornecendo um grau de proteção de pelo menos IP6X de acordo com ABNT NBR IEC60529. O invólucro deve ser adequado para aplicação pretendida e instalado corretamente.

As entradas dos cabos e os elementos de obturação que podem ser utilizados devem ser adequados à aplicação pretendida e corretamente instalados.

Para temperatura ambiente >= 60ºC, fios de resistência ao calor devem ser usados com uma faixa de pelo menos 20K acima da temperatura ambiente.

A temperatura da superfície do invólucro é igual à temperatura ambiente mais 20 K, por uma camada de pó, com espessura de até 5 mm.

Document history

The following list provides notes concerning revisions of this document.

Rev. ID	Date	Notes
113	13/45	IECEx and INMETRO approvals added
114	15/10	PESO/CCOE approval added GOST approval replaced with EAC approval
115	17/07	FM installation drawing updated INMETRO installation drawings updated
116	18/48	FM installation drawing updated

We are near you, *all over the world*

Our trusted red boxes are supported wherever you are

All our devices are backed by expert service and a 5-year warranty. With each product you purchase, you receive personal technical support and guidance, day-to-day delivery, repair without charge within the warranty period and easily accessible documentation.

We are headquartered in Denmark, and have offices and authorized partners the world over. We are a local business with a global reach. This means that we are always nearby and know your local markets well. We are committed to your satisfaction and provide PERFORMANCE MADE SMARTER all around the world.

For more information on our warranty program, or to meet with a sales representative in your region, visit prelectronics.com.

Benefit today from
PERFORMANCE MADE SMARTER

PR electronics is the leading technology company specialized in making industrial process control safer, more reliable and more efficient. Since 1974, we have been dedicated to perfecting our core competence of innovating high precision technology with low power consumption. This dedication continues to set new standards for products communicating, monitoring and connecting our customers' process measurement points to their process control systems.

Our innovative, patented technologies are derived from our extensive R&D facilities and from having a great understanding of our customers' needs and processes. We are guided by principles of simplicity, focus, courage and excellence, enabling some of the world's greatest companies to achieve PERFORMANCE MADE SMARTER.