PRODUCT DETAILS

ARTICLE: 9068

WHEEL N 100X30/40 PLAIN BORE 15



Wheel series N

Wheels with injected polyurethane coating 58 Sh.D on polyamide 6 center. Available with standard shielded or stainless steel sealed precision ball bearings; standard or stainless steel roller bearings; plain bore.
Plain bore wheel.

Technical data

Wheel diameter	D	100 mm
Tyre width	E	30,0 mm
Bore diameter	d	15 mm
Weight article		0,170 kg
Hub width	L	40 mm
Load Capacity		160 kg

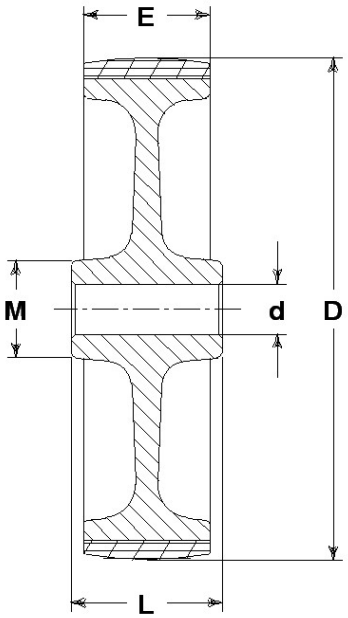

GENERAL INFORMATION / RECOMMENDATIONS AND WARNINGS
The cited text and the complete catalogue in their most up-dated versions are available in the OEM's website page www.lagspa.it/downloads. The dimensions, descriptions, specifications and illustrations herein are indicative and subject to variations without notice. The fact that products are illustrated herein does not necessarily imply they are available from stock nor does it place us under any obligation to supply them.
Tests carried out refer to the original products with original accessories: the replacement of one of the components with others of different manufacture might prevent the same results from being achieved and will automatically invalidate any guarantee. Please contact our technical service concerning any special application.